University of Saskatchewan IEEE Student Branch

ELECTRICAL ENGINEERING 3rd YEAR EXAM FILE

(Term 1)

2003 Edition

Includes:

EE 301
EE 323
EE 331
EE 351
EE 372

Prepared for you by the IEEE

Additional exams available on class web sites and at http://ieee.usask.ca

THE INSTITUTE OF ELECTRICAL AND ELECTRONICS ENGINEERS, INC.
University of Saskatchewan IEEE Student Branch, Box 41 – Engineering Building
University of Saskatchewan, 57 Campus Drive, Saskatoon, Saskatchewan, Canada S7N 5A9
Telephone: (306) 966-5423 Facsimile: (306)-966-8710 E-mail: ieee@engr.usask.ca Web: http://ieee.usask.ca

Welcome to the EE301 Midterm. This is an open book examination. You may refer to your textbook but not to any other material such as notes or other books. You may also use a calculator.

Each problem is worth 20 points; if subparts are weighted differently, the points for each are shown in parentheses. Show your work; credit will be given only if the steps leading to the answer are clearly shown. If a symmetry argument is used, it is sufficient to write "By symmetry we know that...". Partial credit will be given for partially correct answers.

You are to answer a total of five problems. Work the first three problems and any two of the last three.

None of the problems require intricate mathematical manipulations. Several integrals are given on the last page that you might or might not find useful. Cartesian coordinate triples are always (x, y, z).

Answer each of the first three problems.

Problem 1

At the point P given by the Cartesian coordinates (3, 4, 0) there exists two vectors:

$\vec{A} = 2\bar{a}_x + 2\bar{a}_y + \bar{a}_z$ and $\vec{B} = -\bar{a}_x + 2\bar{a}_y + 2\bar{a}_z$.

a) Calculate $\vec{A} \cdot \vec{B}$.

b) Calculate the angle between $\vec{A}$ and $\vec{B}$.

c) What is the point P in spherical coordinates?

d) Convert vector $\vec{A}$ to spherical coordinates.

Problem 2

A charge of 10 nC is placed at the origin. Charges of −5 nC are placed at the Cartesian coordinates (0, 0, 1) and (0, 0, -1) (all measurements in meters). Determine the electric field vector at the point (1, 0, 1) in Cartesian coordinates.

Problem 3

A parallel plate capacitor consists of three plates 10 cm on a side (see diagram). The gap from the center plate to the upper plate is 0.1 mm and the gap to the lower plate is 0.3 mm. The outer plates are connected together by a wire and form one terminal and the center plate forms the other terminal. A voltage is connected across the terminals such that the total charge on the inner plate is +1 nC. What are the charges on the other plates?

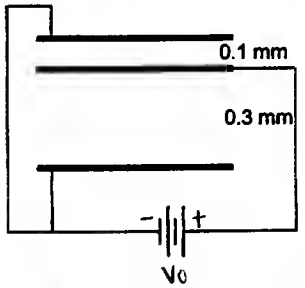

(not to scale)

Answer any two of the following three problems.

Problem 4

A capacitor consists of two concentric metallic spherical shells of smaller radius r_1 and larger radius r_2. The space between the shells is filled with an insulator with dielectric constant ε_R.

a) (17) Determine a formula for the capacitance.

b) (3) A charge of Q is placed on the inner shell and the outer shell is left uncharged. A wire is carefully inserted that shorts the inner shell to the outer shell. How does the charge Q redistribute between the two shells? That is how much charge flows to the outer shell and how much remains on the inner shell? Explain the reasoning behind your answer. (This part requires no calculations, only thinking).

Problem 5

Space is filled with a charge density η that varies with the distance from the z axis according to the formula (in cylindrical coordinates)

$$\eta = Ae^{-\rho}$$

Note: the charge density is called η to avoid confusion with the radial coordinate ρ. Determine the electric field due to this space charge.

Problem 6

An open ended trough consists of three walls (see diagram). The walls at $x = 0$ and $x = a$ are metallic and extend to infinity in the $+y$ direction. Both are grounded. The bottom of the trough at $y = 0$ is specially designed such that the potential varies as a function of x (say by making it out of a resistive material and passing a current through it; the details are not important). The potential along this wall follows a sine function:

$$V(x,0) = V_0 \sin(\tfrac{\pi}{a}x) \quad \text{for} \quad 0 < x < a$$

All the walls extend infinitely far in the z direction. Determine the potential between the walls by solving Laplace's equation.

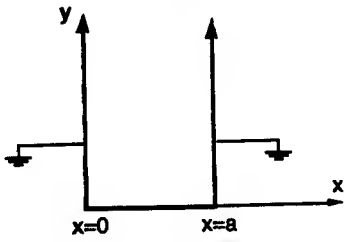

Some random integrals

$\int e^{-x}dx = -e^{-x}$

$\int xe^{-x}dx = -(x+1)e^{-x}$

$\int x^2e^{-x}dx = -(x^2+2x+2)e^{-x}$

$\frac{1}{2\pi}\int_{-\pi}^{\pi} e^{-njx+jz\sin x}dx = J_n(z)$ where $J_n(z)$ is a Bessel function of the first kind

Welcome to the EE301 Final. This is an open book examination. You may refer to your textbook but not to any other material such as notes or other books. You may also use a calculator.

Answer five of the eight problems. You must do at least one of the transmission line problems (6, 7, 8). You must also do at least one of the magnetic field problems (3, 4). All of the problems contain subparts; the subparts are weighted equally.

Show your work; credit will be given only if the correct steps leading to the answer are clearly shown. If a symmetry argument is used, it is sufficient to write "By symmetry we know that...". Partial credit will be given for partially correct answers.

None of the problems require intricate mathematical manipulations. If you get stuck with an impossible integral or equation, you are likely doing the problem incorrectly. Several formulas are given on the last page that you might or might not find useful.

The next two problems are on static magnetic fields. You must do either problem 3 or problem 4 (or both if you wish).

Problem 3

A cylindrical wire of radius a contains a cylindrical cavity of radius b offset from the center by a distance d (see illustration). The solid area of the wire carries a uniform current density $\vec{J} = J_0\vec{a}_z$. Determine the magnetic field everywhere inside the cavity. To do this, use superposition—the current distribution can be thought of as a solid wire with current density $\vec{J}$ superimposed on a smaller wire the size of the cavity with current density $-\vec{J}$. The solution has been broken down into the following steps.

a) Determine the magnetic field inside a solid cylindrical wire with uniform current density $\vec{J}$.

b) Convert the above expression for the field from cylindrical coordinates to Cartesian coordinates.

c) Use the above result to write down the field for a solid wire with current density $-\vec{J}$ of the shape and at the location of the cavity. Because the cavity is offset from the center you will have to modify the expression from b) in a simple way.

d) Use the superposition principle to obtain the field in the cavity, i.e. add the fields from the big wire and small wire together.

Are you surprised by the result?

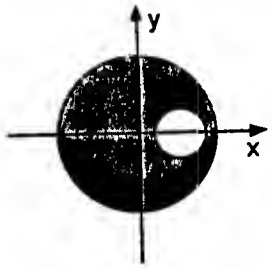

Problem 1

Given the two vectors: $\vec{A} = -\vec{a}_x + 2\vec{a}_y + 3\vec{a}_z$ and $\vec{B} = \vec{a}_x + 3\vec{a}_y + \vec{a}_z$.

a) Calculate $|\vec{A}|$, $|\vec{B}|$, and $\vec{A}\cdot\vec{B}$.

b) Calculate the angle between $\vec{A}$ and $\vec{B}$.

c) Determine a unit vector perpendicular to both $\vec{A}$ and $\vec{B}$.

Problem 2

a) A charge distribution expressed in cylindrical coordinates depends only on the variable ρ. What does that symmetry imply about the electric field due to this charge $\vec{E}(\rho,\phi,z)$?

b) Two parallel plate capacitors have identical dimensions but one is filled with a dielectric with $\varepsilon_R > 1$ and the other is not, i.e. $\varepsilon_R = 1$. Both are attached to a battery and charged to the same voltage V. In which capacitor does the electric field have the greater magnitude? Which capacitor has the greater charge on the plates? For both answers, a correct explanation is required.

Problem 4

An infinite straight wire carries a current of 100 Amps.

a) What is the formula for the magnetic field due to this current?

b) A square loop of wire 50 cm on a side is oriented in the plane containing the straight wire with the nearest edge parallel to the wire (see illustration). What is the flux through the loop if the distance from the nearest edge to the straight wire is x?

c) The loop has total resistance of 10Ω. The loop of wire starts with $x(0)=0$ and moves away from the straight wire at constant velocity of 1 m/s. Determine the current in the loop as a function of time.

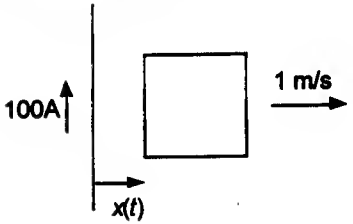

Problem 5

An electromagnetic wave in free space has an electric field given by

$$\vec{E} = 100(\bar{a}_x + \bar{a}_y)e^{j(\omega t - kz)} \text{ V/m}.$$

a) Describe the polarization of the electromagnetic wave (i.e. the direction of the electric field).

b) Determine the magnetic field of the wave.

c) What is the average power density in the wave?

The next three problems are about transmission lines. You must do at least one of these three problems (or more if you wish). Since your text does not include all the transmission line equations, some additional equations are listed at the end.

Problem 6

a) The dielectric used in a coaxial cable has $\varepsilon_R = 2.5$ and $\mu_R = 1$. What is the velocity of propagation in the cable at high frequencies?

b) A transmission line has inductance 0.2 μH/m and capacitance 100 pF/m. What is the characteristic impedance?

c) A 50Ω lossless transmission line has a velocity of propagation of 2×10^8 m/s. What are L and C?

Problem 7

A 50Ω transmission line is terminated with an open (i.e. no load).

a) What is the reflection coefficient at the load?

b) What is the input impedance if the line has length l?

c) What length should the transmission line be such that the input impedance is equal to that of a 50pF capacitor at 100MHz (express the length in wavelengths)? ($Z_C = 1/(j\omega C)$ but you knew that).

Problem 8

A step generator producing a 1 V step and with an internal impedance of 50Ω is connected to 2 m of 150Ω transmission line. The transmission line is terminated with a 250Ω load. The velocity of propagation in the transmission line is 1×10^8 m/s.

a) What is the reflection coefficient at the load?

b) What is the reflection coefficient at the generator?

c) Draw a bounce diagram for 100 ns after the step is applied and label each bounce line with the height of the step.

d) Graph the voltage at the generator end of the transmission line as a function of time for the first 100 ns.

Some potentially useful information

Constants

$$\varepsilon_0 = 8.85\times10^{-12}\ \text{F/m}$$

$$\mu_0 = 4\pi\times10^{-7}\ \text{N/A}^2$$

Transmission line equations.

$$\Gamma = \frac{Z_L - Z_0}{Z_L + Z_0}$$

$$Z_{in} = Z_0\frac{Z_L + jZ_0\tan\beta l}{Z_0 + jZ_L\tan\beta l} \qquad l \geq 0$$

$$Z_{in} = Z_0\frac{1+\Gamma e^{-j2\beta l}}{1-\Gamma e^{-j2\beta l}} \qquad l \geq 0 \qquad = -j3.83$$

$$\beta = 2\pi/\lambda$$

$-j0.6366$

Answer each of the first three problems.

Problem 1

Given the electric field (in spherical coordinates)

$$\vec{E} = Q\left(\frac{1}{r^2} - \left(\frac{1}{2} + \frac{1}{r} + \frac{1}{r^2}\right)e^{-r}\right)\vec{a}_r$$

a) Calculate the charge density.

b) Express the electric field vector at the point $r = 1, \theta = \pi/4, \varphi = \pi/4$ in Cartesian coordinates.

Problem 2

A metal sphere has two spherical cavities inside it the same distance from the center; the illustration shows the sphere in cross section. The sphere has a diameter of 40 cm; the cavities have diameters 10 cm and are separated by 10 cm of metal as shown. The metal has no net charge. Into the center of each hollow is placed a charge Q. Determine

a) The field inside the metal and inside the cavities. (5 points)

b) The force that acts on each charge. (5 points)

c) The field outside the metal sphere. (10 points)

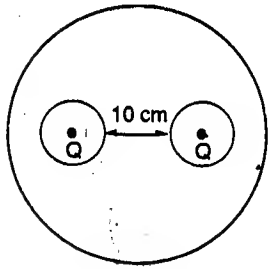

October 23, 2002

University of Saskatchewan
Department of Electrical Engineering

EE301 Electricity, Magnetism and Fields
Midterm Examination
Professor Robert E. Johanson

Welcome to the EE301 Midterm. This is an open book examination. You may refer to your textbook (Hayt and Buck) but not to any other material such as notes or other books. You may also use a calculator. The examination lasts **2** hours.

Each problem is worth 20 points; if subparts are weighted differently, the points for each are shown in parentheses. Show your work; credit will be given only if the steps leading to the answer are **clearly** shown. If a symmetry argument is used, it is sufficient to write "By symmetry we know that...". Partial credit will be given for partially correct answers.

You are to solve a total of **5** problems. Answer the first three problems and any two of the last three.

None of the problems require intricate mathematical manipulations. Cartesian coordinate triples are always (x, y, z).

FOR THE 2001 EXAMS,
GO TO:
http://ieee.usask.ca

December 13, 2002

University of Saskatchewan
Department of Electrical Engineering

EE301 Electricity, Magnetism and Fields
Final Examination
Professor Robert E. Johanson

Welcome to the EE301 Final. This is an open book examination. You may refer to your textbook but not to any other material such as notes or other books. You may also use a calculator. The examination lasts **3** hours.

Answer **six** of the eight problems. Do not answer more than six problems or severe penalties will apply. You must do at least two of the transmission line problems (6, 7, 8). You must also do at least one of the magnetic field problems (3, 4).

Show your work; credit will be given only if the correct steps leading to the answer are **clearly** shown. If a symmetry argument is used, it is sufficient to write "By symmetry we know that...". Partial credit will be given for partially correct answers but only if correct intermediate steps are shown. Each problem is weighted equally although subparts of a problem might be worth varying amounts depending on difficulty.

None of the problems require intricate mathematical manipulations. If you get stuck with an impossible integral or equation, you are likely approaching the problem incorrectly. Several formulas are given on the last page that you might or might not find useful.

Problem 3

A 1 nF capacitor is charged to 10 V.

a) How much energy is stored in the capacitor?

The capacitor is removed from the voltage source and then connected in parallel to an uncharged 2 nF capacitor.

b) What is the voltage across the capacitors?

c) What is the total energy stored in both capacitors?

d) What happened to the missing energy?

Answer any two of the following three problems.

Problem 4

A charge of 10 nC is placed at the origin. Charges of –5 nC are placed at the Cartesian coordinates (0, 0, 1) and (0, 1, 0) (all measurements in meters). Determine the electric field vector at the point (1, 1, 1) in Cartesian coordinates.

Problem 5

A dielectric sphere of radius a and relative dielectric constant ε_R has embedded within it free charge with density given by (in spherical coordinates)

$$\rho = A(1 - r/a)$$

where A is a constant. Determine the electric field $\bar{E}$, the displacement field $\bar{D}$, and the polarization field $\bar{P}$ inside the sphere.

Problem 6

A parallel plate capacitor of area A and small plate separation d contains a dielectric between the plates. The dielectric constant varies linearly from ε_1 at the bottom plate to ε_2 at the upper plate. Solve for the electric field $\bar{E}$ between the plates far from any edge when a voltage V is applied between the plates. Determine a formula for the capacitance.

You might be interested to know that

$\frac{1}{2\pi}\int_{-\pi}^{\pi} e^{-nJx+Jz\sin x}dx = J_n(z)$ where $J_n(z)$ is a Bessel function of the first kind

but probably not.

Problem 1

At the point $P=(1,1,1)$ (in Cartesian coordinates) there are two vectors: $\vec{A}=-\bar{a}_x-\bar{a}_y-\bar{a}_z$ and $\vec{B}=2\bar{a}_x+2\bar{a}_y-\bar{a}_z$.

a) Calculate $|\vec{A}|$, $|\vec{B}|$, and $\vec{A}\cdot\vec{B}$.

b) Express the vector $\vec{A}$ in spherical coordinates.

c) Determine a unit vector perpendicular to both $\vec{A}$ and $\vec{B}$.

Problem 2

a) A point charge of 100 μC is located at the origin. What is the total electric flux passing through the plane parallel to the x-y plane but offset to $z=1$?

b) A parallel plate capacitor uses 15 μm thick mylar as a dielectric. Mylar has a relative permittivity of 3.2 and a dielectric strength of 1.5×10^6 volts per cm. The dielectric strength is the maximum electric field that can exist in the dielectric without breakdown (breakdown would likely destroy the device). If the area of the plates is 100 cm^2, what is the maximum amount of energy that can be safely stored in the capacitor?

The next two problems are on static magnetic fields. You must do either problem 3 or problem 4 (or both if you wish).

Problem 3

Two infinitely long, straight wires each with radius a are parallel to each other and separated by a distance $2b$ (see cross section below). A current I flows in each wire but in opposite directions. Determine an equation for the magnetic field everywhere along the x-axis (including inside the wires. You may assume the current density is uniform within the wires. (hint: use superposition)

cross section

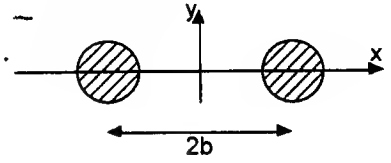

Problem 4

a) A circular loop of wire has a current I flowing through it. The loop has radius a. Use the Law of Biot-Savart to determine the magnetic field at the center of the loop.

b) A small circular loop of wire is now placed at the center of the above loop. The radius of the smaller loop is b, and $b << a$. The two loops lie in the same plane. If the current in the larger loop varies sinusoidally with time as $I=I_0\sin\omega t$, determine an *approximate* expression for the induced current in the smaller loop. Such magnetically coupled loops are used in RFID smart card technology.

Problem 5

A survey team wants to use electromagnetic waves to detect buried metal objects. The idea is to broadcast a 200 Mhz plane electromagnetic wave into the ground and detect any reflected wave. The receiving system can detect the reflected wave only if the electric field has an amplitude greater than 10 mV/cm. The conductivity of the soil is 10^{-3} S/m, and $\mu_R=1$. You may assume that the buried object acts like a perfect mirror reflecting all the power incident back towards the surface.

a) What is the skin depth for the plane wave in the soil?

b) What electric field amplitude of the transmitted electromagnetic wave is needed in order to detect objects buried 3 m deep?

The next three problems are about transmission lines. You must do at least two of these three problems (or all three if you wish). Since your text does not include all the transmission line equations, some additional equations are listed at the end.

Problem 6

a) A lossless transmission line has an inductance of 0.5 μH/m and a capacitance of 50 pF/m. What is the characteristic impedance and the velocity of propagation?

b) A cellular telephone antenna has an impedance of $50+j10\Omega$ at 900 MHz. It is directly connected (i.e. no matching network) to a 2 m length of 50Ω transmission line. What is the reflection coefficient off the antenna? What is the input impedance of the transmission line with the antenna connected? The velocity of propagation in the transmission line is 2×10^8 m/s.

Some potentially useful information

Constants

$$\varepsilon_0 = 8.85 \times 10^{-12} \text{ F/m}$$

$$\mu_0 = 4\pi \times 10^{-7} \text{ N/A}^2$$

Transmission line equations.

$$\Gamma = \frac{Z_L - Z_0}{Z_L + Z_0}$$

$$T = \Gamma + 1$$

$$Z_{in} = Z_0 \frac{Z_L + jZ_0 \tan \beta l}{Z_0 + jZ_L \tan \beta l} \qquad l \geq 0$$

$$Z_{in} = Z_0 \frac{1 + \Gamma e^{-j2\beta l}}{1 - \Gamma e^{-j2\beta l}} \qquad l \geq 0$$

$$\beta = 2\pi / \lambda$$

Problem 7

An antenna with impedance $20 + j100\,\Omega$ receives a power feed over a 75Ω transmission line. Design a matching scheme (you choose the type) so that no power is reflected from the antenna. Work out your matching scheme on the Smith chart.

Problem 8

A step generator producing a 1 V step and with an internal impedance of 50Ω is connected to a transmission line consisting of a 2 m length of 50Ω line joined to a 2m length of 150Ω line that is then joined to another 2m length of 50Ω line (see diagram). The whole transmission line is terminated with a 50Ω load. The velocity of propagation in the transmission line is 1×10^8 m/s.

a) Determine the reflection and transmission coefficients at each junction.

b) Draw a bounce diagram for 100 ns after the step is applied and label each bounce line with the height of the step.

c) Graph the voltage at the center of the 150Ω line for 100 ns after the step is applied.

d) What will the voltage eventually reach at this point after a long time?

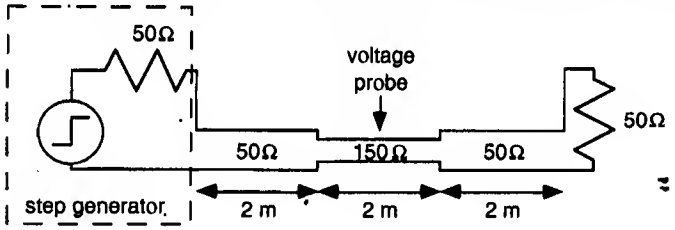

EE 331 Midterm Examination

October 21, 2002

- 2 Hours
- Open Book
- Two pages

1. 20 Marks (5 marks each)

   (a) Describe the differences between these instruction sequences?

   ```
   mov   R1,#80H
   inc   @R1

   inc   80H
   ```

   (b) Briefly describe the 5 memory spaces provided by the 8751 architecture and explain how you would access data from each of these regions.

   (c) Describe unsigned binary, two's complement numeric representation? What support does the 8751 architecture provide for performing the four basic arithmetic operations on single-byte values in these representations.

   (d) Given that the first byte of each of the following instructions is at location 3F0H, what are the ranges of addresses which could be reached by each of the instructions?

   ```
   sjmp   ALABEL
   ajmp   ALABEL
   ljmp   ALABEL
   ```

2. 20 Marks (4 marks each) What will be the value of the accumulator, the carry bit, and the overflow bit after an 8051 executes each of the following instruction sequences? Note that some values may be indeterminate.

   (a)
   ```
   clr    C
   mov    A,#70H
   subb   A,#0D2H
   ```

   (b)
   ```
   mov    A,#0F2H
   rr     A
   add    A,#0FFH
   ```

   (c)
   ```
   mov    A,#22H
   cjne   A,#24H,100
   ```

   (d)
   ```
   mov    20H,#20H
   setb   1
   mov    A,20H
   ```

   (e)
   ```
   clr    PSW
   mov    0,#1
   djnz   R0,70
   mov    A,R0
   ```

3. 20 Marks

   Draw the schematic of a circuit to add 16 kbytes of external program memory and 8 kbytes of external data memory to an 87C51 system.

   - All external memory devices should be 8k×8.
   - The addresses must be fully decoded but the only components available are inverters and 3-input NAND gates.
   - The external program memory should appear at locations 8000H to BFFFH.
   - The external data memory should appear at locations C000H to DFFFH.

4. 30 Marks

   Write a simple 'walking-1' memory-test subroutine for the above system:

   (a) Write 00H to all external data memory locations.

   (b) Write 01H to the first external data memory location.

   (c) Verify that reading the first external data memory location returns 01H and that all other memory locations still contain 00H. If not, your subroutine should return with a value of 0 in the accumulator.

   (d) Write 02H to the first external data memory location.

   (e) Verify that reading the first external data memory location returns 02H and that all other memory locations still contain 00H. If not, your subrounne should return with a value of 0 in the accumulator.

   (f) Repeat until all bits of the first external data memory location have been tested.

   (g) Repeat from step (b) for all external data memory locations.

   If the tests succeed your subroutine should return with a value of 1 in the accu mulator.

   Your program should be adequately commented so that it can be readily understood. The purpose and location of all variablea should be described.

   Hint: Write a `testMem` subroutine which takes two arguments – the 16 bit value of the external memory address which should contain the non-zero value, and the 8 bit value which should be at that address.

5. 10 Marks

   Write an 8051 assembly-language subroutine which multiplies two 8-bit, signed (two's complement) values and returns a 16-bit signed result. One argument is passed to the subroutine in the accumulator and other is passed to the subroutine in special function register B. The subroutine should return with the most-significant byte of the product in SFR B and the least-significant byte of the product in the accumulato r.

   Hint: Use the 87C51 `MUL AB` instruction to multiply the absolute value of the arguments then negate the prodoct if required.

   Bonus qucation (4 marks): Write your subroutine so that it uses no resourc es other than the accumulator, SFR B, and the processor status word.

END

```
ADDR  CODE      LINE#   SOURCE
----  ------    -----   ------
0017 FF            57           MOV     R7,A                ; Remember new bit
0018 B401F5        58           CJNE    A,#1,BITLOOP        ; Loop till all bits have been tested
001B A3            59           INC     DPTR                ; Move pointer to next location
001C E583          60           MOV     A,DPH               ; Get high byte of pointer
001E B4E0EF        61           CJNE    A,#[(MEMBASE+MEMSIZE),BITLOOP       ; Loop till all cleared
0021 7401          62           MOV     A,#1                ; Success!
                   63   DONEMEMORYTEST:
0023 22            64           RET                         ; Return success/failure code
                   65
                   66   ;
                   67   ; testMem subroutine
                   68   ;
                   69   ; Arguments:
                   70   ;       DPTR - location to test
                   71   ;       R7   - value to test
                   72   ;
                   73   ; Register assignments
                   74   ;       R4 - Readback check value
                   75   ;       R5 - Low byte of test location
                   76   ;       R6 - High byte of test location
                   77   ;
                   78   ; Return value
                   79   ;       0 - Failure
                   80   ;       1 - Success
                   81   ;
                   82   ;       test location <- test value
                   83   ;       for(all memory locations)
                   84   ;               if(location = test location)
                   85   ;                       readback check value = test value
                   86   ;               else
                   87   ;                       readback check value = 0
                   88   ;               if((test location) != readback check value)
                   89   ;                       return 0
                   90   ;       return 1
                   91   ;
                   92   TESTMEM:
                   93           ;
                   94           ; Write test value into test location
                   95           ;
0024 EF            96           MOV     A,R7                ; Get test value
0025 F0            97           MOVX    @DPTR,A             ; Store test value in test location
                   98
                   99           ;
                  100           ; Loop over all locations
                  101           ;
0026 AD82         102           MOV     R5,DPL              ; Remember test location
0028 AE83         103           MOV     R6,DPH
002A 90C000       104           MOV     DPTR,#MEMBASE       ; Start at beginning of memory
                  105   MLOOP:
                  106           ;
                  107           ; Determine readback check value
                  108           ;
002D 7C00         109           MOV     R4,#0               ; Assume it's not the test location
002F ED           110           MOV     A,R5                ; Skip if low bytes don't match
0030 B58206       111           CJNE    A,DPL,NOTTESTLOC
0033 EE           112           MOV     A,R6                ; Skip if high bytes don't match
0034 B58302       113           CJNE    A,DPH,NOTTESTLOC
0037 EF           114           MOV     A,R7                ; Test location -- readback is test value
```



```
Assembly process list:

ADDR  CODE      LINE#   SOURCE
----  ------    -----   ------
                    1   ;
                    2   ; Walking-1 memory test
                    3   ;
                    4   ;
                    5   ; Constants
                    6   ;
                    7   MEMBASE EQU     0C000H          ; First location to test
                    8   MEMSIZE EQU     4*1024          ; Number of locations to test
                    9   ;
                   10   ; Variables
                   11   ;
                   12   ;
                   13   ; Memory test subroutine
                   14   ;
                   15   ; Register assignments
                   16   ;       R7 - The single non-zero test value in memory
                   17   ;
                   18   ; Return value
                   19   ;       0 - Failure
                   20   ;       1 - Success
                   21   ;
                   22   ;       for(all memory locations)
                   23   ;               set location = 0
                   24   ;       for(all memory locations)
                   25   ;               for(all bit values)
                   26   ;                       set location = value
                   27   ;                       call MemoryTest
                   28   ;                       if(return value is zero)
                   29   ;                               return 0
                   30   ;
                   31   MEMORYTEST:
                   32           ;
                   33           ; Clear memory
                   34           ;
0000 90C000        35           MOV     DPTR,#MEMBASE   ; Set pointer to external memory
                   36   CLRLOOP:
0003 E4            37           CLR     A               ; Set value to write to external memory
0004 F0            38           MOVX    @DPTR,A         ; Clear one byte
0005 A3            39           INC     DPTR            ; Move pointer to next location
0006 E583          40           MOV     A,DPH           ; Get high byte of pointer
0008 B4E0F8        41           CJNE    A,#[(MEMBASE+MEMSIZE)],CLRLOOP  ; Loop till all cleared
                   42
                   43           ; Loop over all locations
                   44           ;
000B 90C000        45   LOOPLOOP:  MOV     DPTR,#MEMBASE   ; Set pointer to external memory
                   46
000E 7F01          47   BITLOOP:  MOV     R7,#1           ; First value to test
                   48
0010 120024        49           LCALL   TESTMEM         ; Test this location
0013 6008          50           JZ      DONEMEMORYTEST  ; Bad news - report failure
0015 EF            51           MOV     A,R7            ; Get test value
0016 23            52           RL      A               ; Next bit
```

S5.LST

Assembly process list:

```
ADDR  CODE       LINE#   SOURCE
----  ------     -----   ------
                     1   ;
                     2   ; Signed 8-bit multiplication
                     3   ;       Form absolute value of operands
                     4   ;       Multiply absolute values
                     5   ;       Negate result if one operand was negative
                     6   ;
                     7   SIGNEDMUL:
0000 C2D5            8           CLR     F0              ; Clear negate-result flag
0002 30E704          9           JNB     ACC.7,APOS      ; Skip if A is >= 0
0005 F4             10           CPL     A               ; Otherwise negate A
0006 04             11           INC     A
0007 B2D5           12           CPL     F0              ; And complement negate-result flag
                    13   APOS:
0009 30F707         14           JNB     B.7,BPOS        ; Skip if B is >= 0
000C 63F0FF         15           XRL     B,#0FFH         ; Otherwise negate B
000F 05F0           16           INC     B
0011 B2D5           17           CPL     F0              ; And complement negate-result flag
                    18   BPOS:
0013 A4             19           MUL     AB              ; Multiply absolute values
0014 30D50A         20           JNB     F0,DONE         ; Skip if result >= 0
0017 F4             21           CPL     A               ; Otherwise negate result
0018 63F0FF         22           XRL     B,#0FFH
001B 2401           23           ADD     A,#1
001D 5002           24           JNC     DONE
001F 05F0           25           INC     B
                    26   DONE:
0021 22             27           RET
```

S4.LST

```
ADDR  CODE       LINE#   SOURCE
----  ------     -----   ------
0020 FC             115           MOV     R4,A
                    114   NOTTHETLOC:
                    117           ;
                    118           ; Verify memory location
                    119           ;
0039 E0             120           MOVX    A,@DPTR         ; Read external memory
003A 6C             121           XRL     A,R4            ; Does it match the expected value?
003B 6003           122           JZ      MGOOD           ; Yes, skip
002D 7400           123           MOV     A,#0            ; No, set error return value
003F 22             124           RET                     ; Return error status
                    125   MGOOD:
0040 A3             126           INC     DPTR            ; Move pointer to next location
0041 E583           127           MOV     A,DPH           ; Get high byte of pointer
0043 B4E0CA         128           CJNE    A,#[(MEMBASE+MEMSIZE)],BITLOOP    ; Loop till all cleared
0046 7401           129           MOV     A,#1            ; Success!
0048 22             130           RET                     ; Return success status
```

EE 331 Midterm Examination

October 24, 2001

- 2 Hours
- Open Book
- Two pages

1. 25 Marks (5 marks each)

   (a) Describe the differences between this instruction

   ```
   inc   A
   ```

   and this instruction

   ```
   add   A,#1
   ```

   (b) Briefly describe the 87C51 immediate, direct and indirect addressing modes. Given an example of each. Which memory locations are accessible by these modes?

   (c) Describe the binary Gray Code and it's applications.

   (d) What will be the value of the accumulator, the carry bit, and the overflow bit after an 8051 executes each of the following instruction sequences? Note that some values may be indeterminate.

   i.
   ```
   clr   C
   mov   A,#70H
   subb  A,#F2H
   ```

   ii.
   ```
   clr   C
   mov   A,#F2H
   subb  A,#FFH
   ```

   iii.
   ```
   mov   A,#22H
   cjne  A,#20H
   ```

   iv.
   ```
   mov   A,#12H
   add   A,#FFH
   rlc   A
   inc   A
   ```

   (e) Describe the differences between the three versions of the jmp instruction

   ```
   sjmp  ALABEL
   ajmp  ALABEL
   ljmp  ALABEL
   ```

2. 25 Marks

   Draw the schematic of a circuit to add 8 kbytes of external program memory and 16 kbytes of external data memory to an 87C51 system.

   - All external memory devices should be 8k×8.
   - The address bus should be fully decoded using only inverters and 4-input NAND gates.
   - The external program memory should appear at locations 2000H to 3FFFH.
   - The external data memory should appear at locations 0000H to 3FFFH.

3. 25 Marks

   Write an 87C51 subroutine which reverses, in place, a block of internal data memory and returns a value indicating whether or not the block of memory was palindromic (i.e. that the contents after reversal are the same as before. The arguments to the subroutine are:

   - In the accumulator, the length of the block of memory.
   - In R0, the address of the first location of the block of memory.

   On return from your subroutine, the contents of the block of memory should be reversed. The carry flag (C) should be set to 1 if the block of memory was a palindrome and set to 0 if the block of memory was not a palindrome. The contents of the accumulator and registers should be the same as when the subroutine was called.

   For example, suppose the subroutine was called with the accumulator set to 5 and R0 set to 40H, and the contents of the five memory locations beginning at location 40H were 01H, 02H, 23H, 12H, 30H. On return from the subroutine the five memory locations beginning at location 40H would contain 30H, 12H, 23H, 02H, 01H and the carry flag would be clear.

   You may assume that the block of memory to be reversed will not overlap any of the memory locations used for the 87C51 registers.

4. 25 Marks

   Write an 8751 assembly-language subroutine which performs binary to ASCII hexadecimal conversion on unsigned binary values of arbitrary length. The arguments to the subroutine are:

   R0 Pointer to the N-byte value to be converted to ASCII hexadecimal representation. The value is stored most-significant-byte first.

   R1 Pointer to the $2N$-byte output buffer where the ASCII values are to be stored.

   A The number of bytes to be converted.

   Leading zeroes should be converted to ASCII space characters.

END

MOV

```
MOV  Count, A
Mov  A, @R0
ANL  A, #0Fh
Cjne A, #0Ah, Cont
Cont: JC   lessthan
      mov  @R1, A+'A'-#10h
      inc  R1
      sjmp next
lessthan: mov @R1, A+'0'-#10h
      inc  R1

next:

      inc R0
      dec count
```

EE323.01 **MIDTERM EXAMINATION**

Name: [redacted]
Student #: [redacted]

26.1 + 2 / 30

Date: October 24, 2002
Time: 4:00pm-5:00pm
Room: 1B71
Answer all 3 questions
2-pages formula allowed

Question 1: (20marks)

Use a diode-pair to replace R_2 in the circuit below. Assume $L_+ = -L_- = 12V$. For $R_1 = R = 10k\Omega$, find capacitance C to have an output frequency of 4281Hz at 25°C. The diodes have $V_D = 0.7V$ at 25°C with a temperature coefficient of $-2mV/°C$. What frequency results at 0°C?

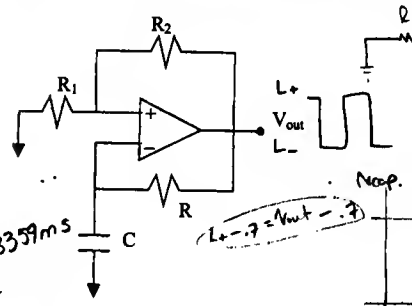

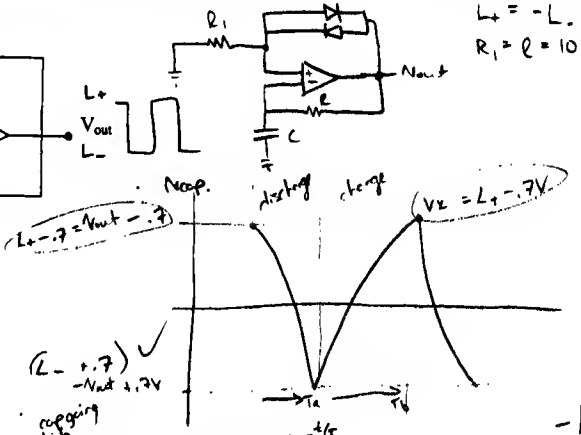

$L_+ = -L_- = 12V$
$R_1 = R = 10k$

$f = 4281Hz$
$T = \frac{1}{f} = .23359ms$
$T_a = T_b = \frac{1}{2}T$
$\therefore T_a = .11679ms$

$-L_+ = L_-$

V_0 @ 0°C

$V_0(0°C) = .7V - 25°\left(\frac{2mV}{°C}\right)$
$= .7 - .05$
$= .65V$

$V_x = L_+ - .65V$

$V_x = V_0 - (V_0 - V_{orig})e^{-t/\tau}$

$V_x = L_+ - (L_+ - (L_- + .7)e^{-t/\tau}$

$\frac{-(V_x - L_+)}{(L_+ - L_- + .7)} = e^{-t/\tau}$

$\left(\frac{L_+ - V_x}{2L_+ + .7}\right) = e^{-t/\tau}$

$\ln\left(\frac{L_+ - V_x}{2L_+ + .7V}\right) = \frac{-t}{\tau}$

$\tau \ln\left(\frac{2L_+ + .7V}{L_+ - V_x}\right) = t$ @ $t = T_a$, $V_x = L_+ - .7V$

$T_a = RC \ln\left(\frac{2L_+ + .7V}{L_+ - L_+ + .7V}\right)$

$T_a = RC \ln\left(\frac{24.7V}{.7V}\right)$

$.11679 \times 10^{-3}s = (10k)C \ln\left(\frac{24.7}{.7}\right)$

$\therefore C = \frac{.11679 \times 10^{-3}s}{3534.78\,\Omega} = 3.277nF = C$

Question 2: (20marks)

a. Find V_{out} of the circuits below. The op-amp is ideal.

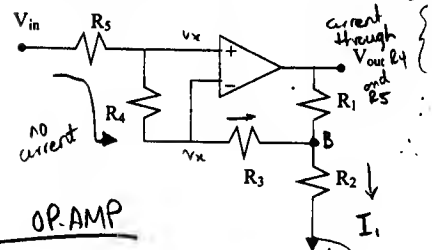

current through V_{out} R_4 and R_5 $\left\{ \frac{V_{in} - V_x}{R_5} = \frac{V_x - V_x}{R_4} = 0 \right.$ $\therefore V_{in} = V_x$

no current

$\therefore$ no currents through R_3, R_4 and R_5

$\therefore$ B is @ V_{in}

$\frac{V_{in} - 0V}{R_2} = I_1 = \frac{V_{out} - V_{in}}{R_1}$

ideal OP-AMP

- no current in +ve or -ve terminals
- +ve terminal is at same potential as -ve terminal

$\frac{V_{in}}{R_2} + \frac{V_{in}}{R_1} = \frac{V_{out}}{R_1}$ → $V_{in}\left(\frac{1}{R_2} + \frac{1}{R_1}\right)^{R_1 R_2} = V_{out}$ $V_{in}\left(\frac{R_1}{R_2} + 1\right) = V_{out}$

$\therefore V_{out} = V_{in}\left(\frac{R_1}{R_2} + 1\right)$ ✓

b. Sketch the output of the integrator shown below. The supply voltages to the op-amp are ±12V and the output is initially zero.

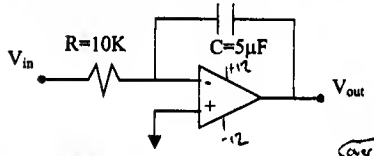

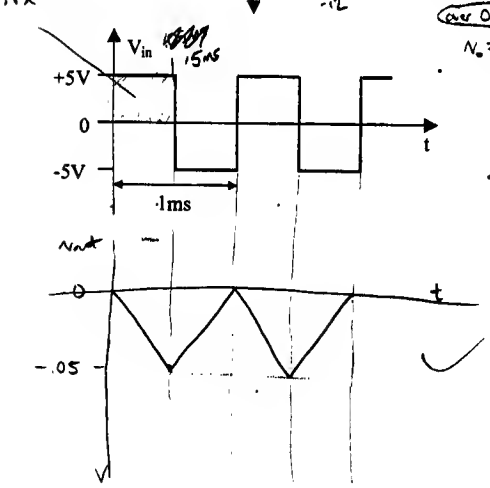

Integrator $V_o = \frac{-1}{RC}\int_0^t V_i\,dt$

where $RC = (10k)(5\mu F) = .05s = 50ms$

* integrator has inverting output

capacitor is initially uncharged

over 0 to .5ms

$V_o = \frac{-1}{RC}\int_0^{.005} 5\,dt = \frac{-1}{RC}\,5t\Big|_0^{.005} = \frac{-1}{.05s}\,5(.0005s)$

at .5ms, $V_{out} = \frac{-5(.0005)}{.05} = -.05$ @ $T = .5ms$

over .5 to 1ms

$V_o = \frac{-1}{RC}\int_0^{.0005} -5\,dt$ + dc from before

$= \frac{+1}{.05s}\left(5t\Big|_0^{.5ms}\right) - .05$

$= \frac{5(.0005)}{.05s} - .05 = 0$ @ $T = 1ms$

EE323.3 (01)
Instructor: A. Dinh

Final Examination

Date: December 10, 2002
Time: 9:00am – 12:00pm
Room 165, Physic

Answer all 6 questions in 4 pages. State clearly appropriate assumptions (if any) in your answers. 4-page formula sheet and calculator are allowed.

1. **Question 1: (20 marks)**

Derive the transfer function, V_o/V_{in}, of the all-pass filter below. For a given R, L, C, find frequencies at which the output undergoes a phase shift of 90° and 180° (i.e., frequencies are functions of R, L, C). Find sensitivity of the 90° frequency with respect to the inductor L.

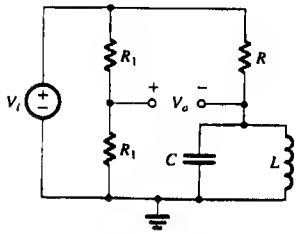

2. **Question 2: (20 marks)**

For the circuit below, find the loop gain L(s), L(jω), and the frequency for zero loop-phase. Find R2/R1 for oscillation.

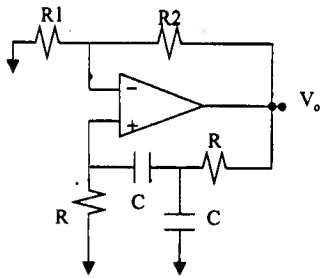

Question 3: (20marks)

An op-amp has the following open-loop transfer function:

$$A(j\omega) = \frac{v_{out}}{v_{in}} = \frac{10^5}{(1+j\frac{\omega}{\omega_1})(1+j\frac{\omega}{\omega_2})(1+j\frac{\omega}{\omega_3})}$$

where ω_1 = 3rad/s, ω_2 = 3krad/s, and ω_3 = 30krad/s.

a. The op-amp is connected in a unity positive feedback configuration. What is the output frequency of the op-amp?
b. The op-amp is connected in a negative feedback configuration. What is the maximum feedback coefficient that can be tolerated before instability results? What is the minimum closed-loopgain of this op-amp without oscillation?

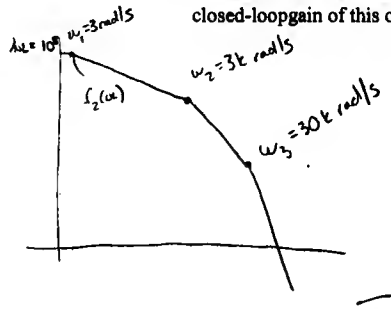

bounded oscillator, stable

a) unity positive feedback, $\beta = 1$ ∴ $A_{CL} = 1$

$A_{CL} = 1$ occurs at f_{unity} (no gain) ie X intercept

$f_2(\omega) = \frac{3 \text{ rad/s}}{2\pi}$

$f_{unity} = A_{CL} f_2(CL)$
$= f_2(CL) = \frac{A_{OL}}{A_{CL}} f_2(OL)$
$= \frac{10^5}{1}\left(\frac{3 \text{ rad/s}}{2\pi}\right)$

$f_{unity} = 47746 \text{ Hz}$

∴ $\omega_{unity} = 2\pi f = 300\,000$ rad/s

b) $\omega_{180} = -180 = -\tan^{-1}\left(\frac{\omega_{180}}{3}\right) - \tan^{-1}\left(\frac{\omega_{180}}{3000}\right) - \tan^{-1}\left(\frac{\omega_{180}}{30000}\right)$

$\omega_{180} = 9492.0493$ rad/s

$|A(j\omega_{180})| = \left|\frac{10^5}{(1+j\frac{9492}{3})(1+j\frac{9492}{3000})(1+j\frac{9492}{30000})}\right| = \left|\frac{10^5}{(1+j3.164)(1+j3.164)(1+j.3164)}\right|$

$A = 9.08$

∴ max $\beta = \frac{1}{A} = \frac{1}{9.08} = \boxed{.11012 = \beta}$

- the minimum closed loop gain of this OP-AMP w/out OSC.
- we know that oscillation can occur when the frequency of input is increased beyond ω_{180}. At ω_{180}, there is a corresponding gain that correlates the minimum gain and not oscillating

from Below

$\boxed{A_{CL} = 9.08}$

TABLE 14.5 n-pole Butterworth networks

n pole Butterworth networks

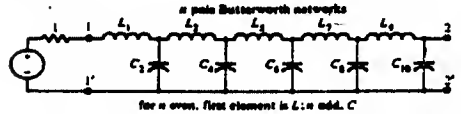

for n even, first element is L; n odd, C

n	L_1	C_2	L_3	C_4	L_5	C_6	L_7	C_8	L_9	C_{10}
2	0.7071	1.414								
3	0.5000	1.333	1.500							
4	0.3827	1.302	1.577	1.531						
5	0.3090	1.2944	1.382	1.694	1.545					
6	0.2588	0.7579	1.302	1.535	1.759	1.533				
7	0.2225	0.6560	1.054	1.397	1.659	1.799	1.588			
8	0.1951	0.5776	0.9371	1.259	1.528	1.729	1.824	1.561		
9	0.1736	0.5133	0.8414	1.141	1.404	1.620	1.777	1.842	1.563	
10	0.1564	0.4634	0.7626	1.041	1.292	1.510	1.687	1.812	1.855	1.564
n	C_{10}	L_9	C_8	L_7	C_6	L_5	C_4	L_3	C_2	L_1

5. **Question 5: (20 marks)**

Consider the circuit in a temperature measurement below. The op-amps have an output saturation of ±12V. The A/D is a 5-bit successive-approximation A/D converter type with an analog span of 0 to 10V.

a. Find the input voltage of the A/D converter.

b. The thermistor, R_T, has a resistance of 2KΩ at 20°C. Find the coefficient β of the thermistor if its temperature in the circuit is 5°C.

Formula: $R(T) = R(T_0)e^{\beta(1/T-1/T_0)}$ where β and T are in K.

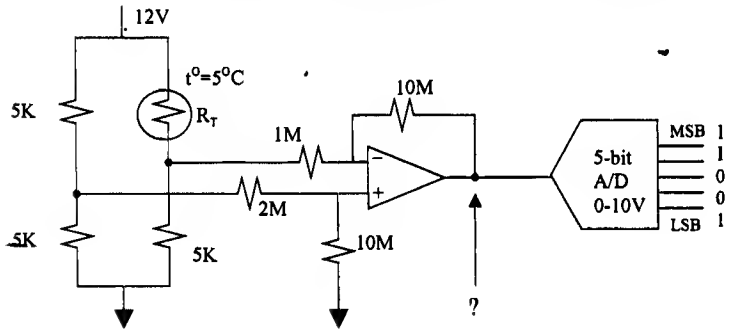

3. **Question 3: (20 marks)**

a. **Provide (very) short answers to the following questions:**

i. Name 4 physical effects contribute to the voltage generated in a thermal couple.
ii. Why standards and calibration are required in instrumentations?
iii. List intrinsic noise sources in instrumentation circuits. How to protect circuits from extrinsic noise?
iv. What are the benefits and what are the drawbacks in using digital instrumentations?
v. Draw a **block diagram** for a remote temperature measuring system using thermistor as a sensing element and current temperature is sent over the internet to the users.

b. A capacitive displacement sensor is calibrated using the bridge network below. The bridge is balanced when the input frequency is adjusted to 8MHz. Find displacement ,x, of the sensor. It is known that the sensor has a capacitance of $C = \frac{5\varepsilon_0 bx}{d}$, where b=1cm, d=0.1mm, and ε_0=8.8542x10^{-12} F/m.

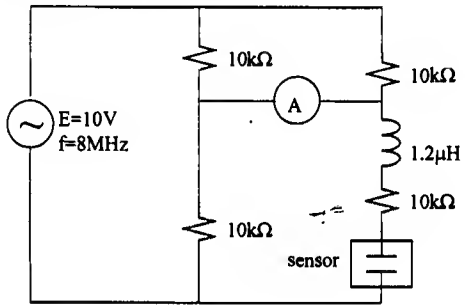

4. **Question 4: (20 marks)**

In a digital instrumentation system to measure velocity of a fluid pipe, the A/D converter has a sampling rate of 20Ksample/second. Find the Nyquyst frequency of the analog signal from the transducer. Design a Butterworh response **RLC** filter for anti-aliasing purpose in front of the A/D converter. The filter should have a cut off, ω_p, at Nyquist frequency with an A_{max} of 1dB and A_{min} of 10dB at a frequency of 1.5 times Nyquist frequency. Use 50Ω resistor at the filter input.

Formulae: $A_{MAX} = 20\log(\sqrt{1+\varepsilon^2})$ and $\varepsilon = \sqrt{10^{\frac{A_{MAX}}{10}} - 1}$

$$A(\omega_s) = 10\log[1+\varepsilon^2(\frac{\omega_s}{\omega_p})^{2N}]$$

6. Question 6: (20 marks)

A group of students set up the circuit below to measure the length of a cable for their 4th year project. The co-axial cable is a capacitor having 5.2pF/m. The 6-bit counter is enabled from a monostable circuit and its clock is from an astable circuit. If the final count from the counter is 010110 as shown, calculate the length of the cable.

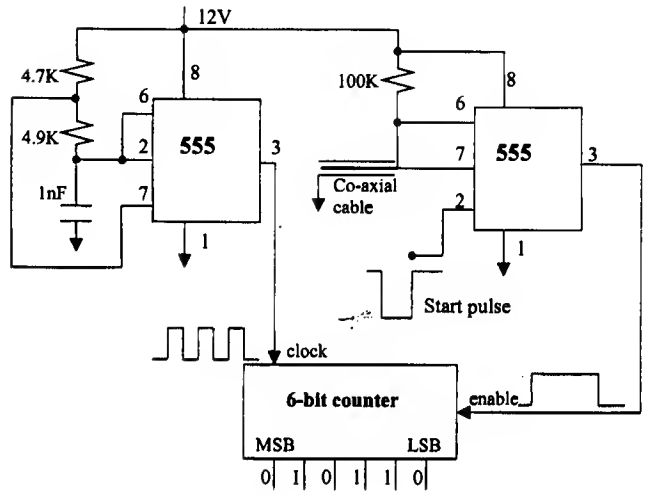

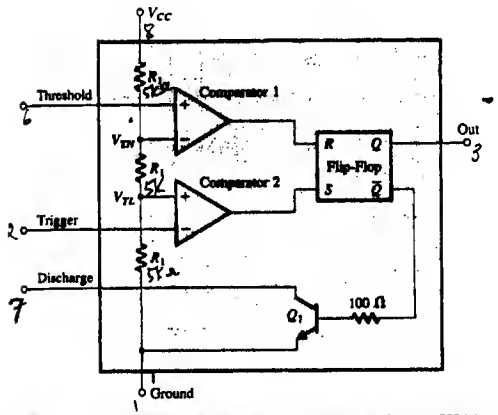

Fig. 12.27 Block diagram representation of the internal circuit of the 555 IntegrTimer.

EE323 **MIDTERM** October 23, 2001
1:30pm – 3:00pm

Open books, open notes. Answer all questions.
Use the other site of the paper if you require more space.
Total mark: 50

47/50 Congratulations Joel.

1. Question 1 (15 marks)

In the non-inverting voltage-to-current converter shown, the basic op-amp has infinite input resistance and zero output resistance. For input v_s and output i_o, find an expression for the feedback factor $\beta = v_f/i_o$. For an open loop gain A = 10^3 mA/V, what must β be for a closed-loop gain of 10 mA/V? For this β, find values of R_1, R_2, and r to make i_o/v_s = 10 mA/V, (while allowing the voltage across R_L to be as large as possible for a given power supply, yet using no resistor smaller than 150Ω). What is the value of i_o when v_s=1V?

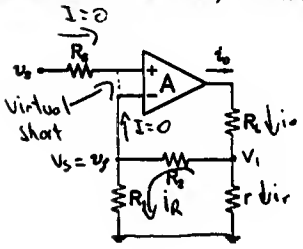

$A_{OL} = 10^3$ mA/V

$$A_{CL} = \frac{A_{OL}}{1 + A_{OL}\beta}$$

For A_{CL} = 10mA/V

$$10\text{mA/V} = \frac{10^3\text{mA/V}}{1 + 10^3\text{mA/V}(\beta)}$$

$$10\text{mA/V} + 10^4\text{mA}^2/\text{V}^2(\beta) = 10^3\text{mA/V}$$

$$10^4\text{mA}^2/\text{V}^2(\beta) = 990\text{mA/V}$$

$$\beta = 0.099\text{ k}\Omega$$

$$i_R = \frac{V_f}{R_1}$$

$$V_1 = i_R(R_1 + R_2) = \frac{V_f}{R_1}(R_1 + R_2)$$

$$i_r = \frac{V_1}{r} = \frac{V_f}{R_1 r}(R_1 + R_2)$$

$$i_o = i_R + i_r = \frac{V_f}{R_1} + \frac{V_f}{R_1 r}(R_1 + R_2)$$

$$\beta = \frac{V_f}{i_o} = \frac{V_f}{\frac{V_f}{R_1} + \frac{V_f}{R_1 r}(R_1 + R_2)}$$

$$\beta = \frac{1}{\frac{r + R_1 + R_2}{R_1 r}}$$

$$\boxed{\beta = \frac{r R_1}{r + R_1 + R_2}}$$

To make $\frac{i_o}{v_o}$ = 10mA/V: For V_{R_L} to be a max, V_1 must be a min. To accomplish this, choose $\boxed{r = 150\Omega}$ and find min. possible values for R_1 and R_2.

(over)

$$\beta = \frac{r R_1}{1 + R_1 + R_2}$$

$$99\Omega = \frac{150\Omega R_1}{150\Omega + R_1 + R_2}$$

$$14850\Omega^2 + 99\Omega R_1 + 99\Omega R_2 = 150\Omega R_1$$

$$99\Omega R_2 = 51\Omega R_1 - 14850\Omega^2$$

$$R_2 = 0.515 R_1 - 150\Omega$$

Choose $\boxed{R_2 = 150\Omega}$

then: $300\Omega = 0.515 R_1$

$$\boxed{R_1 = 582\Omega}$$

If A_{CL} = 10mA/V and V_S=1V, then:

$$i_o = A_{CL} V_S = 10\text{mA/V}(1\text{V})$$

$$\boxed{i_o = 10\text{mA}}$$

2. Question 2 (20 marks)

Consider the circuit shown, using diodes which conduct at $V_D = 0.7V$, and an amplifier saturating at ±10V, with R1 = R2 = 10 K and C1 = 10C2 = 0.01 μF. Find the output pulse width and frequency, if v_i is a 60 Hz square wave of 2Vpp amplitude. Sketch the waveforms at nodes a through e. What is the smallest input signal required to trigger the circuit? How long does it take for this circuit to be ready for a new input?

C_2: $V_{C_2} = 0V + (1V)e^{-\frac{t}{C_2R_2}}$

$0 = 1e^{-\frac{t}{C_2R_2}}$

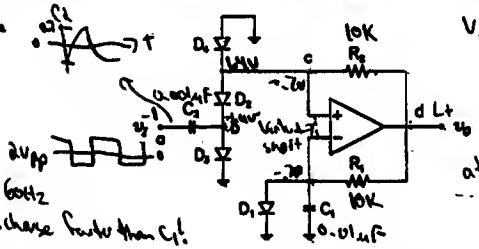

$V_D = 0.7V$

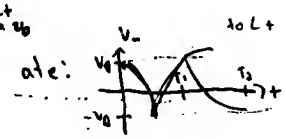

C_2 will charge + discharge faster than C_1!

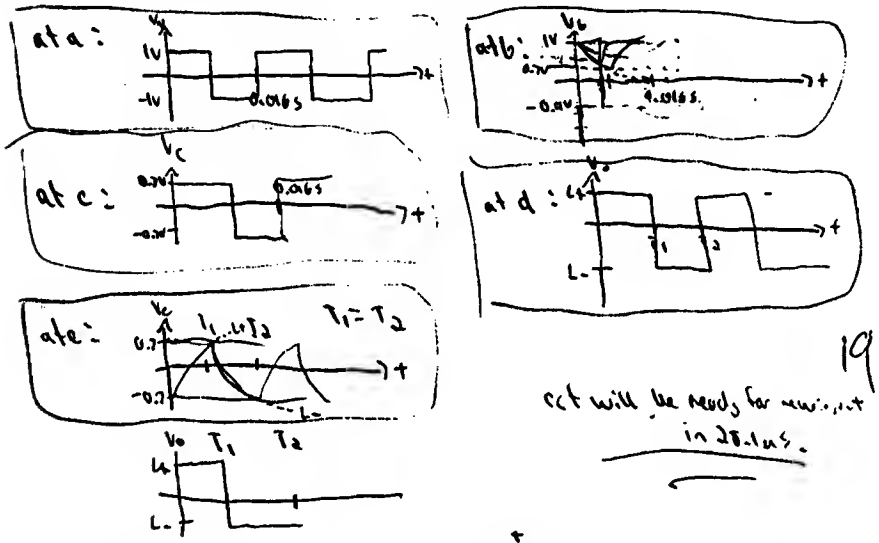

19

cct will be ready for new input in 28.1μs.

For C_1 charging: $V_- = L_+ - (L_+ + V_D)e^{-\frac{t}{R_1C_1}}$ $t = T_1$, $V_- \geq V_D \Rightarrow$ switch

so $T_1 = R_1C_1 \ln\left(\frac{L_+ + V_D}{L_+ - V_D}\right)$ ✓ $T_1 = T_2$ ✓

and $T = 2R_1C_1 \ln\left(\frac{L_+ + V_D}{L_+ - V_D}\right) = 2.805 \times 10^{-5}$ s

output: f = $\boxed{36.7\text{ KHz}}$ and pulse width 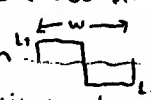 = $\boxed{28.1\text{ μs}}$

Smallest signal to trigger is $\boxed{1.4V\ p\text{-}p}$ otherwise current won't flow.

#2:

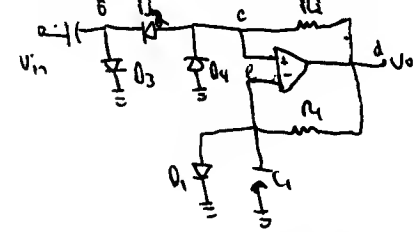

monostable

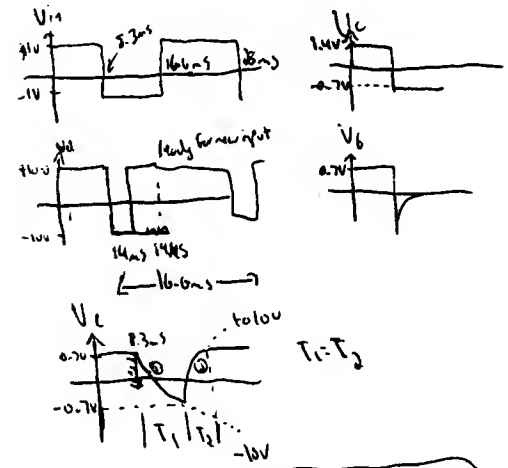

$T_1 = T_2$

Curve ①: $\boxed{V_e = L_- + (L_- - V_D)e^{-\frac{t}{R_1C_1}}}$

$\boxed{f = 60\text{Hz} \quad \text{duty cycle} \neq 50\%}$

$V_e = -V_D$, $t = T_1$

$-V_D = L_- + (L_- - V_D)e^{-\frac{T_1}{R_1C_1}}$

$e^{-\frac{t}{R_1C_1}} = \frac{L_- + V_D}{L_- - V_D}$

$T_1 = -R_1C_1 \ln\left(\frac{L_- + V_D}{L_- - V_D}\right)$

$T_1 = -10K(0.01\mu F)\ln\left(\frac{-9.3}{-10.7}\right)$

$T_1 = 14\mu s$

3. Question 3 (15 marks)

A 5V peak triangular voltage with a period of 20ms, depicted on the axis shown below, is applied to an ideal op-amp integrator. Sketch v_{OUT} as a function of time. The capacitor has zero initial charge.

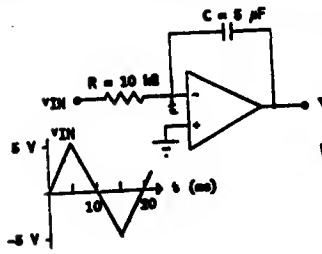

$i_C = C\frac{dV_C}{dt}$

$dV_C = \frac{i_C}{C}dt$

$V_{out} = -V_C = \int -\frac{i_C}{C}dt$

$V_C = \frac{-1}{RC}\int V_{in}\,dt$

$V_{in}(t) = +V/ms \rightarrow 0 \le t \le 5ms$

$V_{in}(t) = -t\,V/ms + 10V \rightarrow 5ms \le t \le 15ms$

$V_{in}(t) = +V/ms - 20V \rightarrow 15ms \le t \le 20ms$

13

For an integrator: $V_{out} = \frac{-1}{RC}\int V_{in}\,dt$

$0 \le t \le 5$: $V_{out} = \frac{-1}{5mF(10k)}\int_0^5 t\,dt = \frac{-1}{5mF(10k)}\left[\frac{t^2}{2}\right]_0^5$

$5 \le t \le 15$: $V_{out} = \frac{-1}{5mF(10k)}\int_5^{15}(-t+10)dt = \frac{-1}{5mF(10k)}\left[-\frac{t^2}{2}+10t\right]_5^{15}$

$15 \le t \le 20$ $V_{out} = \frac{-1}{5mF(10k)}\int_{15}^{20}(t-20)dt = \frac{-1}{5mF(10k)}\left[\frac{t^2}{2}-20t\right]_{15}^{20}$

t(ms)	Vout (V)
0	0
1	-1×10^{-5}
3	-9×10^{-5}
5	-25×10^{-4}
6	-1.20
8	-1.60
12	-2.0
15	-3.0

t(ms)	Vout(V)
16	6.40
18	7.20
20	8.0

(over)

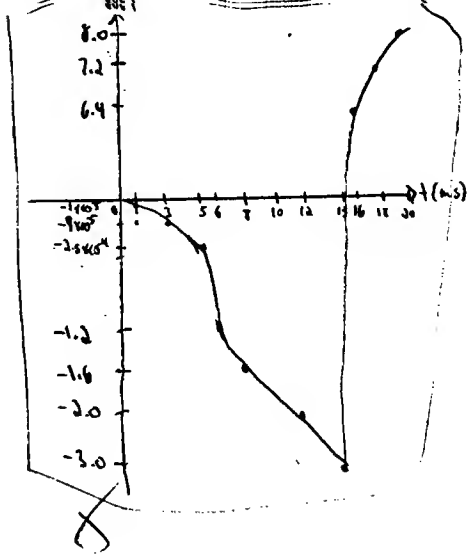

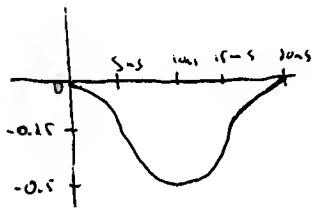

EE323 **Final Examination** Date: December 11, 2001
Instructor: A. Dinh Time: 9:00am – 12:00pm

Answer 5 out of 6 questions.
Open books, open notes.
Good luck and have a Merry Christmas.

1. **Question 1: (20 marks)**

For the circuits (a) and (b) below, derive transfer functions V_{OUT}/V_{IN} as a function of frequency. For R=10K and C=15.9nF, sketch amplitude and phase response of V_{OUT}/V_{IN}.

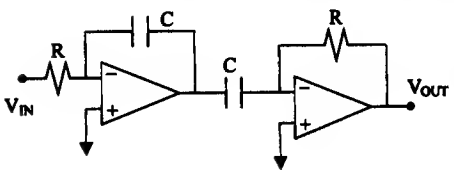

(a)

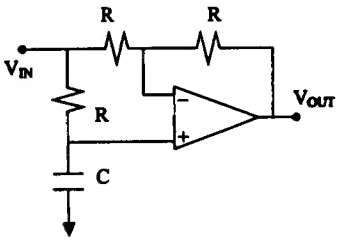

(b)

2. **Question 2: (20 marks)**

The feedback diagram shown below describes an oscillator circuit. In this case, $|P(\omega)|=0.1$ and $\angle P(\omega) = -135^{o}$ for all ω.

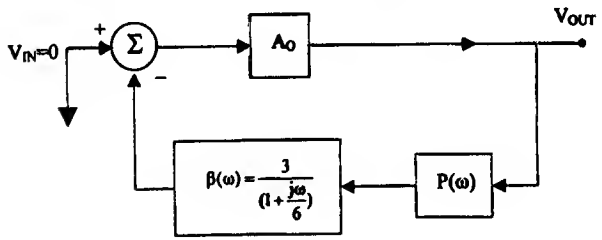

a) Find the frequency of oscillation.
b) Find the minimum value of A_O needed to maintain oscillation.

3. **Question 3: (20 marks)**

For the circuit below, find the loop gain L(s), L(jω), the frequency for zero loop-phase. Find R2/R1 for oscillation.

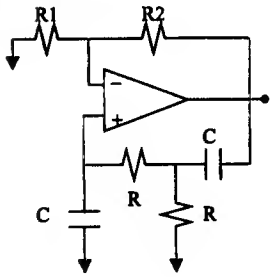

4. **Question 4: (20 marks)**

Consider the circuit in a temperature measurement below. The A/D is a 5-bit successive-approximation A/D converter type with an analog span of 0 to 10V, find the input voltage of the A/D converter. The thermistor, R_T, has a resistance of 2K at 20°C and the coefficient β is assumed to be constant at 3650, find temperature of the thermistor.

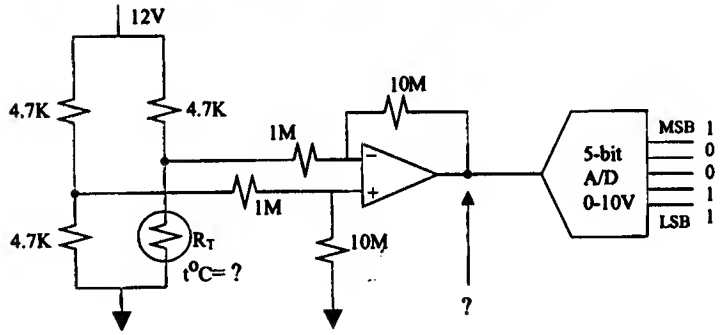

5. **Question 5: (20 marks)**

In a digital instrumentation system to measure velocity of a fluid pipe, the A/D converter has a sampling rate of 20Ksample/second. Find the Nyquyst frequency of the analog signal from the transducer. Design an active filter for anti-aliasing purpose in front of the A/D converter. The filter should have a cut off frequency at Nyquist frequency with a selection of F_{50}/F_3 is at least 3. Since the output signal of the transducer has a wide range of frequency, no ripple is allowed in the filter passband and only 10K resistors are available to realize the filter.

Table 13-1. Design Data for Chebyshev Filters

Ripple = 3 dB (Butterworth) Cutoff frequency = center frequency = 1.0

Number of sections	$\frac{f_{co}}{f_0}$	Q Sct 1	Q Sct 2	Q Sct 3	Q Sct 4	Q Sct 5	Q Sct 6	Q Sct 7	Q Sct 8
1	17.79	0.7071							
2	4.82	0.5411	1.306						
3	3.41	0.5176	0.7071	1.932					
4	2.76	0.5094	0.6014	0.8999	2.563				
5	2.43	0.5062	0.5612	0.7071	1.101	3.196			
6	1.81	0.5045	0.5412	0.6302	0.8213	1.307	3.551		
7	1.61	0.5032	0.5297	0.5925	0.7071	0.9401	1.514	4.466	
8	1.48	0.5024	0.5239	0.5699	0.6468	0.7962	1.091	1.782	5.101

Ripple = 0.1 dB Cutoff frequency = 1.0

Number of sections	$\frac{f_{co}}{f_0}$	F Sct 1 Q Sct 1	F Sct 2 Q Sct 2	F Sct 3 Q Sct 3	F Sct 4 Q Sct 4	F Sct 5 Q Sct 5	F Sct 6 Q Sct 6	F Sct 7 Q Sct 7	F Sct 8 Q Sct 8
1	16.89	0.9321 0.7674							
2	3.56	0.8491 0.6185	0.8491 2.185						
3	1.82	0.4988 0.8997	0.7658 1.338	0.8717 4.669					
4	1.82	0.3923 0.8994	0.6139 1.184	0.8999 2.468	0.8999 5.092				
5	1.82	0.3249 0.8992	0.5086 1.139	0.7232 2.048	0.8994 5.088	0.8997 12.64			
6	1.82	0.3469 0.8990	0.4298 1.100	0.6014 1.888	0.8988 5.123	0.8975 5.735	0.8999 17.66		
7	1.16	0.2188 0.8991	0.3728 1.084	0.5205 1.709	0.7307 2.764	0.8999 4.405	0.8466 7.871	0.8941 24.46	
8	1.12	0.1998 0.8975	0.3280 1.074	0.4639 1.745	0.6468 2.888	0.7764 4.869	0.8999 8.869	0.8999 16.64	0.8995 84.82

6. **Question 6: (20 marks)**

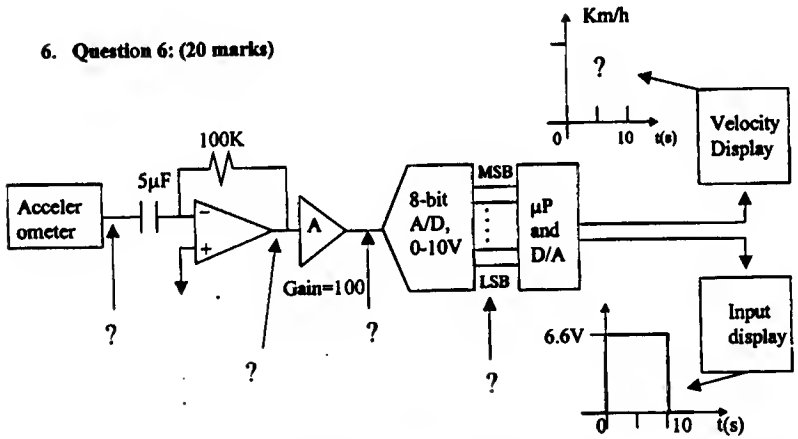

The above arrangement is used to measure velocity of a vehicle (not a good design). The waveform shown at the input display is the output of the D/A converter (data from A/D connects directly to D/A). Ignore quantization error, find the A/D output word. Sketch analog input voltage waveform at the A/D converter, the amplifier A input and the accelerometer output. The accelerometer has an inversion factor of 0.25V/m/s^2 (i.e., 250mV corresponds to 1m/s^2), find final velocity of the vehicle if its initial velocity is 100Km/h and sketch the vehicle velocity.

University of Saskatchewan
Department of Electrical Engineering
EE 830/EE 452 Instrumentation
Midterm Examination

October, 2001

Instructor: R.E. Gander
Duration: 50 minutes
Note: One bound textbook, course notes, calculator and assignments allowed.
Answer **BOTH** questions. The questions are of equal value.

1. In Assignment #3 you designed an amplifier with a gain of 400. An alternate approach is shown below. Determine the equivalent voltage noise at the input for the system. Assume that the ambient temperature is 35 °C and assume a noise equivalent bandwidth of 50 Hz at a center frequency of 2 kHz. What is the relative contribution of each stage to the total noise?

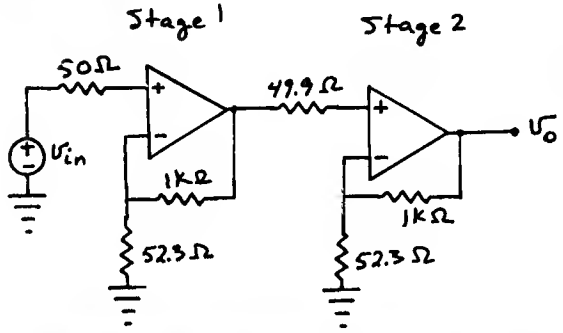

operating characteristics at specified free-air temperature, $V_{CC\pm}$ = ±15 V

PARAMETER		TEST CONDITIONS	T_A†	TLE2027C MIN	TLE2027C TYP	TLE2027C MAX	TLE2027AC MIN	TLE2027AC TYP	TLE2027AC MAX	UNIT
SR	Slew rate at unity gain	R_L = 2 kΩ, C_L = 100 pF, See Figure 1	25°C	1.7	2.8		1.7	2.8		V/μs
			Full range	1.2			1.2			
V_n	Equivalent input noise voltage (see Figure 2)	R_S = 100 Ω, f = 10 Hz	25°C		3.3	8		3.3	4.5	nV/√Hz
		R_S = 100 Ω, f = 1 kHz			2.8	4.8		2.8	3.8	
$V_{N(PP)}$	Peak-to-peak equivalent input noise voltage	f = 0.1 Hz to 10 Hz	25°C		50	250		50	130	nV
I_n	Equivalent input noise current	f = 10 Hz	25°C		1.5	4		1.8	4	pA/√Hz
		f = 1 kHz			0.4	0.8		0.4	0.6	
THD	Total harmonic distortion	V_O = ± 10 V, A_{VD} = 1, See Note 5	25°C		< 0.002%			< 0.002%		
B_1	Unity-gain bandwidth (see Figure 3)	R_L = 2 kΩ, C_L = 100 pF	25°C	7	13		9	13		MHz
B_{OM}	Maximum output-swing bandwidth	R_L = 2 kΩ	25°C		30			30		kHz
A_m	Phase margin at unity gain (see Figure 3)	R_L = 2 kΩ, C_L = 100 pF	25°C		55°			55°		

†Full range is 0°C to 70°C
NOTE 5: Measured distortion of the source used in the analysis was 0.002%.

... 2

2. A platinum RTD probe has a resistance of 1000 Ω at 25 °C, a temperature co-efficient, α of 0.4 Ω/Ω/K, and a thermal dissipation constant of 5 mW/K. Design an interface circuit for this transducer so that the output is 0 to 10 V over the temperature range 0 to 100 °C. Your design should strive to maximize the sensitivity, but it should not cause a self-heating error greater than 1%.

**********THE END**********

University of Saskatchewan
Department of Electrical Engineering
EE 452/EE830 - Instrumentation
Final Examination

December 2001

Instructor: R. E. Gander

Time: 3 Hours

Note: Calculator, one bound textbook, published Course Notes, individual course notes and assignments allowed.
Answer ALL questions.

Marks

(40) 1. A cable (wire rope) manufacturer is interested in measuring the force exerted on and the velocity of the cable as it is pulled through the machine used to wind the strands of the cable. Discuss 3 possible ways of measuring each of the two parameters (that is, force and velocity). Provide sketches to clarify any mechanical mounting or interfacing. Your discussion should include advantages and disadvantages of each method. You should also decide which of the proposed methods seems to be the most promising.

(20) 2. A resolver is to be used to measure angular displacement over the range ±25°. The resolver has two outputs available:

$v_1 = av_{ref} \sin\theta$
$v_2 = av_{ref} \cos\theta$
where $av_{ref} = 10\ V_{rms}$.

Explain which output would be better to use over the specified range. For the selected output, what will be the rms voltage range? Sketch the expected transfer function of the output voltage with respect to angle. The sketch should be sufficiently accurate to indicate any nonlinearity in the relationship. What voltage resolution will be required to achieve 0.1° angular displacement resolution? What is the minimum word size required to achieve this resolution if the signal is digitized?

(15) 3. A civil engineer is using a microcomputer-based data acquisition system to record vibrations at 8 points on a bridge truss during load testing. The load test simulates the flow of traffic across the bridge. The data acquisition board has an 8-channel multiplexer, a sample and hold circuit, and a 12-bit analog to digital converter. The maximum acquisition rate is 40,000 samples per second. Each of the eight vibration signals is passed through a low-pass, anti-aliasing filter with a cutoff frequency of 500 Hz prior to being connected to a multiplexer input. In order to test this set-up, the engineer is using a function generator to feed a sinusoidal signal to all 8 channels simultaneously. At low frequencies, everything seems to work properly. However, when she uses a frequency close to the cutoff frequency, the waveforms displayed "don't line up properly". How would you explain to her that the sampling process causes this shifting? (Incidentally, how much phase shift do you expect?) Is this phase shift a reason for concern in her application?

Marks

(40) 4. The instrumentation system shown below is to be used to measure fluid pressure in a hydraulic actuator. The pressure signal has a bandwidth of 10 Hz. A 5-kHz, 5-V_{rms}, sinusoidal voltage source is used to excite the transducer bridge. The bandpass filter/amplifier is used to amplify the bridge output. The precision rectifier and low-pass filter are used to obtain a dc voltage proportional to the pressure signal. The low-pass filter must pass the voltage signal due to pressure variation with no more than 1% attenuation, but it must attenuate the 10-kHz rectifier ripple by at least 60 dB. Design a low-pass filter with the necessary passband and stopband characteristics. [Note: if a filter of order greater than 2 is required, provide the detailed design for one second-order section.]

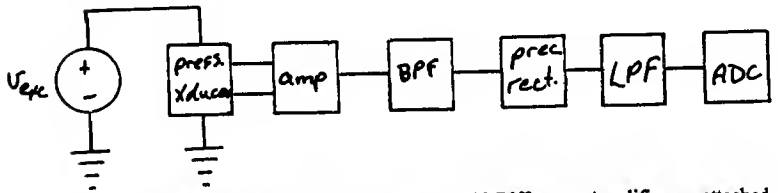

(40) 5. Some of the data sheets for the Burr-Brown INA117 Difference Amplifier are attached. Figure 6 (a to d) shows four variations of the device used as a current-to-voltage converter. All the resistors, except R_s and R_o, are part of the device. Therefore, the noise voltage specified includes the resistor thermal noise as well as the current and voltage noise of the amplifier. Draw the noise model for this device. Determine the output noise due to thermal noise at 10 kHz. [Note: you will need to make an assumption about the bandwidth.] Determine the output noise that is due to the amplifier's current and voltage noise at 10 kHz. What will be the change in total noise at +125 °C? at -55 °C?

*** The End ***

Merry Christmas!

BURR-BROWN®

INA117
AVAILABLE IN DIE

High Common-Mode Voltage DIFFERENCE AMPLIFIER

FEATURES

- COMMON-MODE INPUT RANGE: ±200V (V_s = ±15V)
- PROTECTED INPUTS: ±500V Common-Mode ±500V Differential
- UNITY GAIN: 0.02% Gain Error max
- NONLINEARITY: 0.001% max
- CMRR: 86dB min

APPLICATIONS

- CURRENT MONITOR
- BATTERY CELL-VOLTAGE MONITOR
- GROUND BREAKER
- INPUT PROTECTION
- SIGNAL ACQUISITION IN NOISY ENVIRONMENTS
- FACTORY AUTOMATION

DESCRIPTION

The INA117 is a precision unity-gain difference amplifier with very high common-mode input voltage range. It is a single monolithic IC consisting of a precision op amp and integrated thin-film resistor network. It can accurately measure small differential voltages in the presence of common-mode signals up to ±200V. The INA117 inputs are protected from momentary common-mode or differential overloads up to ±500V.

In many applications, where galvanic isolation is not essential, the INA117 can replace isolation amplifiers. This can eliminate costly isolated input-side power supplies and their associated ripple, noise and quiescent current. The INA117's 0.001% nonlinearity and 200kHz bandwidth are superior to those of conventional isolation amplifiers.

The INA117 is available in 8-pin plastic mini-DIP and SO-8 surface-mount packages, specified for the 0°C to +70°C temperature range. The metal TO-99 models are available specified for the –25°C to +85°C and –55°C to +125°C temperature range.

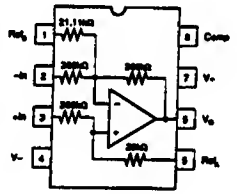

International Airport Industrial Park • Mailing Address: PO Box 11400 • Tucson, AZ 85734 • Street Address: 6730 S. Tucson Blvd. • Tucson, AZ 85706
Tel: (520) 746-1111 • Twx: 910-952-1111 • Cable: BBRCORP • Telex: 066-6491 • FAX: (520) 889-1510 • Immediate Product Info: (800) 548-6132
PDS-740E

4.99

SPECIFICATIONS

ELECTRICAL

At T_A = +25°C, V_S = ±15V unless otherwise noted.

PARAMETER	CONDITIONS	INA117AM, BM			INA117BM			INA117P, KU			UNITS
		MIN	TYP	MAX	MIN	TYP	MAX	MIN	TYP	MAX	
GAIN Initial [1] Error vs Temperature Nonlinearity [2]			1 0.01 5 0.0002	0.02 10 0.001		•	0.05		•	•	V/V % ppm/°C %
OUTPUT Rated Voltage Rated Current Impedance Current Limit Capacitive Load	I_O = +20mA, −5mA V_S = ±5V Vo Common Mode Operation	±10 +20, −5	±12 0.01 +40, −12 1000			•			•		V mA Ω mA pF
INPUT Impedance Voltage Range Common-Mode Rejection [3] DC AC, 60Hz vs Temperature, DC AM, BM, P, KU BM	Differential Common-Mode Differential Common-Mode, Continuous V_{CM} = −200mV to +10V T_A = T_{MIN} to T_{MAX}	±10 ±200 70 80 80 86	600 400 86 80 75 75		80 80	• • •	50 •		• • •		kΩ MΩ V V dB dB dB dB
OFFSET VOLTAGE Initial KU Grade (SO-8 Package) vs Temperature vs Supply vs Time	RTO [4] T_A = T_{MIN} to T_{MAX} V_S = ±5V to ±15V		100 0.5 50 300	1000 40	50	•	1000 30		•	2000	µV µV µV/°C µV/V µV/mo
OUTPUT NOISE VOLTAGE f_O = 0.01Hz to 10Hz f_O = 10kHz	RTO [4]		25 600			•			•		µVp-p nV/√Hz
DYNAMIC RESPONSE Gain Bandwidth, −3dB Full Power Bandwidth Slew Rate Settling Time: 0.1% 0.01% 0.01%	V_O = 20Vp-p V_O = 10V Step V_O = 10V Step 10V Step, V_{CM} = 0V	30 2	350 2.5 0.5 15 4.5			•			•		kHz kHz V/µs µs µs µs
POWER SUPPLY Rated Voltage Range Quiescent Current	Electrical Performance V_S = 0V	±5	±15 1.5	±18 3		•			•		V V mA
TEMPERATURE RANGE Specification: AM, BM, P, KU BM Operation Storage		−25 −40 −40		+85 +125 +125 +125		•		0		+70 +85 −55	°C °C °C °C

*Specification same as for INA117BM.

NOTES: (1) Connected as difference amplifier (see Figure 1). (2) Nonlinearity is the maximum peak deviation from the best-fit straight line as a percent of full-scale peak-to-peak output. (3) With recommended trim/balance circuit. See discussion of common-mode rejection in Application Information section. (4) Includes effects of amplifier's input bias and offset currents. (5) Includes effects of amplifier's input current noise and thermal noise contribution of resistor network.

The information provided herein is believed to be reliable; however, BURR-BROWN assumes no responsibility for inaccuracies or omissions. BURR-BROWN assumes no responsibility for the use of this information, and all use of such information shall be entirely at the user's own risk. Prices and specifications are subject to change without notice. No patent rights or licenses to any of the circuits described herein are implied or granted to any third party. BURR-BROWN does not authorize or warrant any BURR-BROWN product for use in life support devices and/or systems.

For Immediate Assistance, Contact Your Local Salesperson

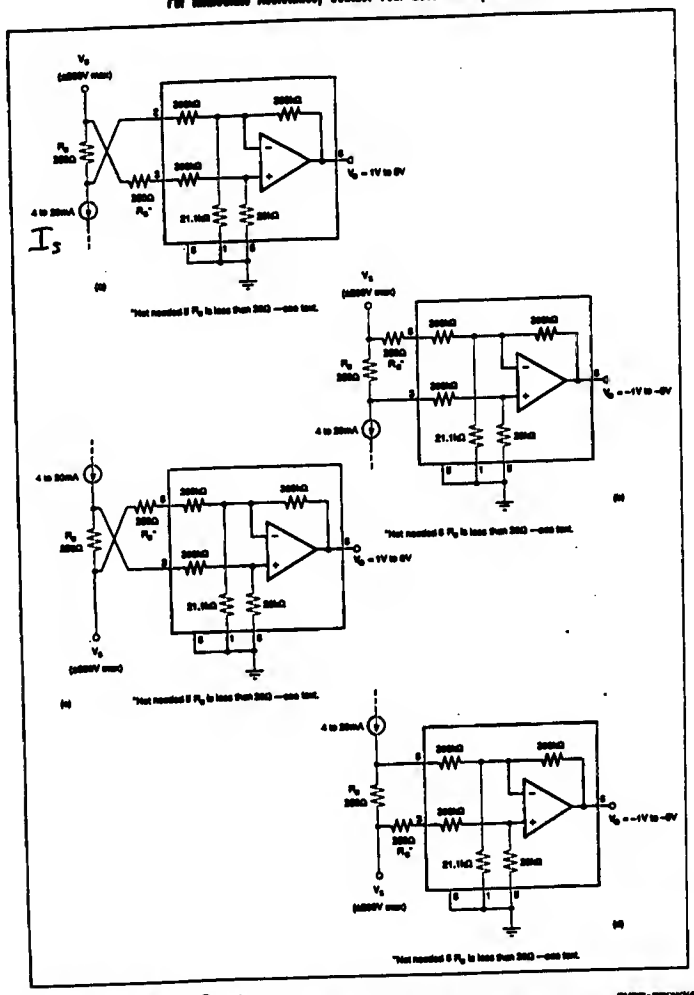

FIGURE 6. Current to Voltage Converter.

EE321 **MIDTERM EXAMINATION** Date: February 13, 2001
Time: 1:00pm-2:30pm

Student name: .....
Student number: .....

Answer 3 out of 4 questions. Use the other side of the paper if you need more space.

Question 1 (20 marks)

a. Represent the multistage amplifier on the left as a two-port device shown on the right.
b. A 1K load is connected to the output port, write the expression of the output waveform if a voltage of $v_i=(5mV)\sin(2\cdot\pi\cdot(1.6\cdot10^6)t)$ is applied at the input port. Assume all capacitors are short circuit at that frequency.

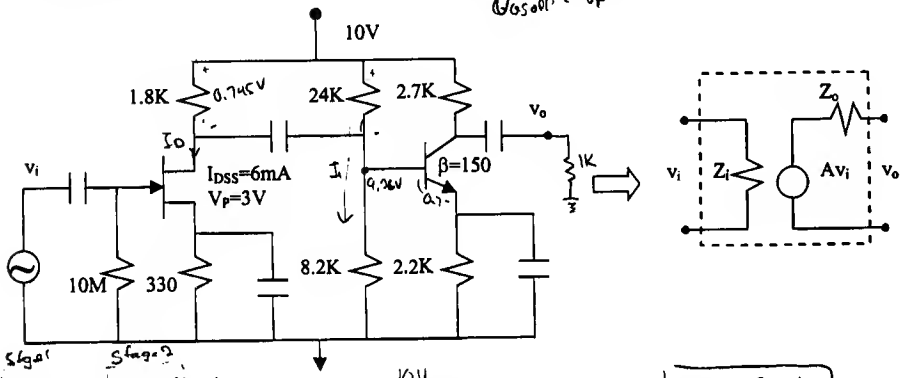

$V_{GSQP} = -V_P = -3V$

$Z_m = R_3 // \beta(r_e' + R_{E1})$

$Z_m = 10M$

$\frac{10V}{24K + 8.2K} = .31mA = I_1$

$V_{24K} = 0.31mA(24K)$

$V_{3K} = 0.74S$

$I_D = \frac{0.74S V}{1.8K} = 0.414mA$

$Z_{in2} = 24K // 8.2K // \beta(r_e' + R_E)$

$Z_{in2} = 6028$

Stage1

$\frac{I_D}{I_{DSS}} = \frac{0.414mA}{6mA} = 0.07$

$\frac{I_D}{I_{DSS}} = \left(1 - \frac{V_{GS}}{V_{GSOFF}}\right)^2$

$\sqrt{0.07} = \left(1 - \frac{V_{GS}}{V_{GSOFF}}\right) = 0.263$

$g_{mo} = \frac{-2I_{DSS}}{V_{GSOFF}} = \frac{-2(6mA)}{-3V} = 0.004$

$g_m = g_{mo}\left(1 - \frac{V_{GS}}{V_{GSOFF}}\right)$

$= 0.004(0.263)$

$g_m = 0.00105$

$A = g_m r_d$

$= g_m(R_D // R_L)$

$= 0.00105(1.8K)$

$A_1 = 1.89$ ✗

Stage2

$A_2 = \frac{2.7K}{r_e'}$ $r_e' = \frac{25mV}{I_E}$

$= \frac{2.7K}{6.43}$ $I_E = \frac{1.25 - 0.7V}{2.2K}$

$A_2 = 420$ ✗ $= 3.9mA$

$r_e' = \frac{25mV}{3.9mA}$

$= 6.43$

$Z_{out} = 2.7K$

$A = A_1 A_2 \left(\frac{Z_{in}}{Z_{in}+R_S}\right)\left(\frac{Z_{in2}}{Z_{in2}+Z_{out}}\right)$

$A = (1.89)(420)\left(\frac{10M}{10M+0}\right)\left(\frac{6028}{6028+2.7K}\right)$

$A = 549$ ✓

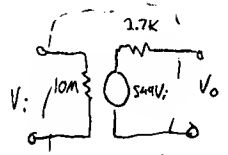

14

Question 2 (20marks)

For the circuit below, write the expression and sketch the waveform of the output voltage, (v_{out}), if $v_{in}=(5mV)\sin(2\cdot\pi\cdot(1.6\cdot10^6)t)$. The transistors have $\beta_{DC}=\beta_{ac}=200$ and $V_{BE}=0.7V$. Assume the class C amplifier (Q2) generates a full output voltage swing from 9V supply.

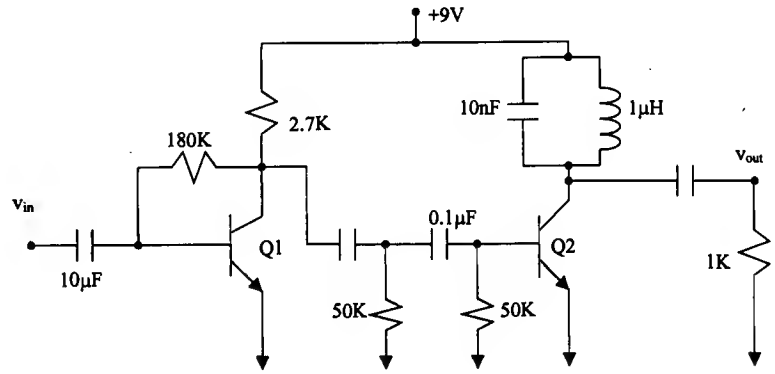

Question 3 (20marks)

For the amplifier shown below, find the ac voltage gain $\frac{v_0}{v_2 - v_1}$, the input and output impedances. All of the transistor pairs are matched. The transistors have β=100, V_{BE}=0.7V and early voltage V_A=50V. What does the gain become with a 1K load?

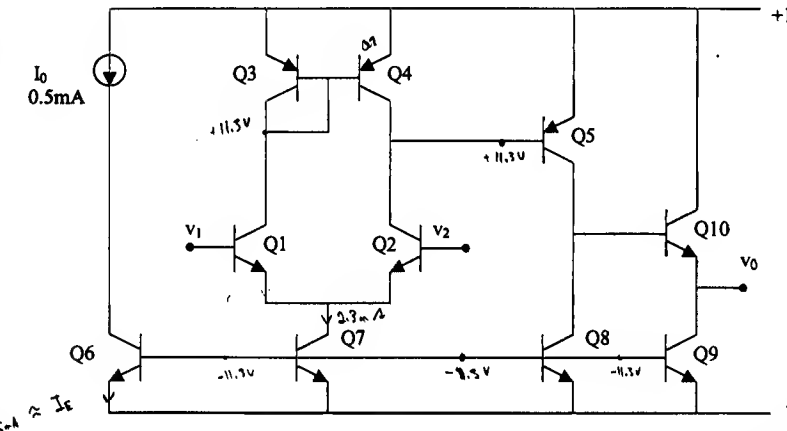

$0.5mA \approx I_E$

β=100 $V_A = 50V$

$R = \frac{V_A}{I_C}$

$R = \frac{50V}{0.5mA}$

R = 10000

$I_T = \frac{V_{CC} - V_{EE} - V_{BE}}{R}$

$= \frac{12V - (-12V) - 0.7V}{10\,000}$

$I_T = \frac{23.3V}{10\,000}$

$= 2.3\,mA$

I =

No Resistors there for active load!!!
Gain would be unable to calculate, unless you count Resistance of transistors as R_E, R_1, R_2 etc.

Stage 1

$A = \frac{R_C}{2r_e} =$

$Z_{in} = 2\beta r_e$

$Z_{out} = R_C$

Stage 2

$A = \frac{R_E}{r_e + R_E}$

$Z_{in} = R1 // R2 // \beta(r_e + R_E)$

$Z_{out} = R_E // (r_e + \frac{R1 // R2}{\beta})$

Stage 3

$A = \frac{R_E}{r_e + R_E}$

$Z_{in} = R1 // R2 // \beta(r_e + R_E)$

$Z_{out} = R_E // (r_e + \frac{R_1 // R_2}{\beta})$

$A = A_1 A_2 A_3 \left(\frac{Z_{in1}}{Z_{in} + R_g}\right)\left(\frac{Z_{in2}}{Z_{in2} + Z_{out1}}\right)\left(\frac{Z_{in3}}{Z_{in3} + Z_{out2}}\right)$

$Z_{in\,Tot} = Z_{in1}$

$Z_{out\,Tot} = Z_{out3}$

11

Question 4 (20marks)

The circuit below is to be biased so that V_{OUT} = 0 Volt and $I_{C5} = I_{C6}$ = 1mA when the inputs are zero. Assume the transistors have V_{BE} = 0.7V and β=100. Q1 and Q2 are matched.

a. Find R1, R4, R5 and R6 to achieve the desired bias parameter.
b. Find total gain of the amplifier.
c. Find output impedance of the overall amplifier.

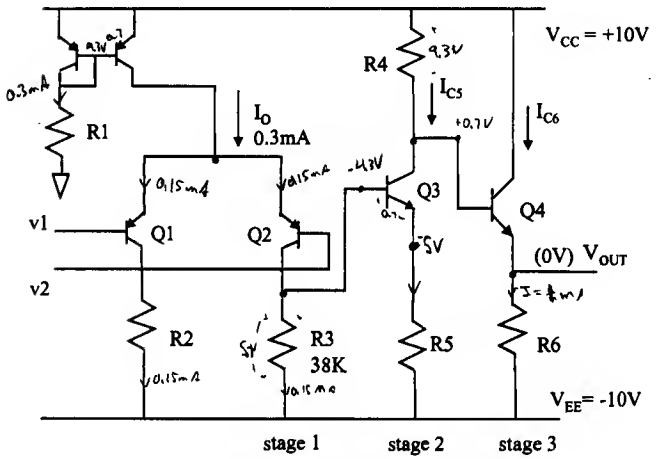

a) $R_6 = \frac{10V}{1mA}$

$R_6 = 10K\Omega$

$V_{R3} = 0.15mA(38K)$

$V_{R3} = 5.7V$

$R_5 = \frac{5V}{1mA}$

$R_5 = 5K\Omega$

$R_4 = \frac{9.3V}{1mA}$

$R_4 = 9.3K\Omega$

$R_1 = \frac{9.3V}{0.3mA}$

$R_1 = 31K\Omega$

b)

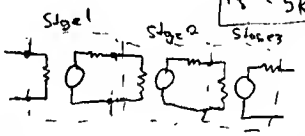

Stage1

$Z_{in} = 2\beta r_e$ $r_e = \frac{25mV}{0.15mA} = 167$

$= 2(100)167$

$= 33K\Omega$

$Z_{out} = 38K = R_C$

$A = \frac{R_C}{2r_e} = \frac{38K}{2(167)} = 114$

Stage 2

$Z_{in} = 38K // 100(r_e + 5K)$

$r_e = \frac{25mV}{1mA} = 25$

$= 38K // 100(25 + 5K)$

$Z_{in} = 35K\Omega$

$Z_{out} = R_4 = 9.3K\Omega$

$A = \frac{9.3K}{25 + 5K\Omega} = 1.85$

Stage3

$Z_{in} = 9.3K // 100(r_e + 10K)$

$= 9.3K // 100(25 + 10K)$

$= 9.2K$

$Z_{out} = 10K // (25 + \frac{9.3K}{100})$

$= 117\Omega$

$A = \frac{10K}{25 + 10K} \approx 1$

$A = A_1 A_2 A_3 \left(\frac{Z_{in1}}{Z_{in} + R_g}\right)\left(\frac{Z_{in2}}{Z_{in2} + Z_{out1}}\right)\left(\frac{Z_{in3}}{Z_{in3}}\right)$

$= (114)(1.85)(1)\left(\frac{33K}{38K}\right)\left(\frac{35K}{35K + 38K}\right)\left(\frac{9.2K}{9.2K + 9.3K}\right)$

$A_T = 50.3$

c) $Z_{out} = 117\Omega = Z_{out3}$

16

University of Saskatchewan
College of Engineering
EE 321.3 Final Examination

Instructor: J.E. Morelli

Date 14 April, 2000
Time: 3 hours (09:00 - 12:00)

Notes: All questions have equal value.
Answer only 5 of the 6 questions.
One page of notes may be brought into the examination.
Hand held calculators are permitted.
State any assumptions and justify all of your answers.
Budget your time wisely as this is a long examination.

1. A FET transistor circuit is shown in Figure 1a. Also shown are the output characteristic and the transfer characteristic in Figures 1b and 1c respectively.

a. What type of FET is used in this circuit? Briefly describe how this transistor works and how the output characteristic behaviour is produced.

b. Given that basic equation for this FET, $I_D = k (V_{GS} - V_t)^2$, find the following values:

i. k
ii. V_{GSQ}
iii. V_{DD}
iv. R_2
v. R_S
vi. R_D
vii. V_{DSQ}

Show all of the steps in your calculations and be sure to explain what you are doing. Hint, it is not necessary to find the above values in order.

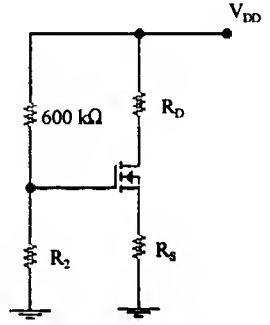

Figure 1a

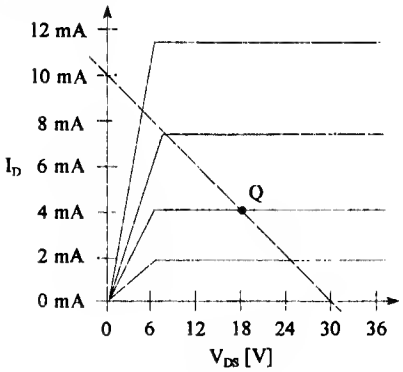

Figure 1b

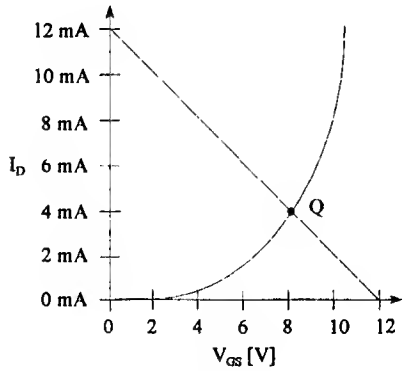

Figure 1c

2. The differential amplifier is the device at the core of the operational amplifier which is used in many analog circuits. The differential amplifier is in turn made up of basic BJT amplifier units that are appropriately biased. Biasing is commonly accomplished with the use of current sources.

a. Describe briefly how the current source in Figure 2a works

b. Find the current sourced by the current source in Figure 2a, assuming that Q3 and Q4 are identical and have a static forward current gain of 200.

c. The current source in Figure 2a can be modeled effectively by the components shown within the dashed box in Figure 2b. Sketch the output characteristic of the current source by itself (this is a sketch of the current, I_Q, the versus voltage V_{AB}).

d. Consider the a.c. signals v_{in1} and v_{in2} to be decomposed into differential , v_D, and common mode, v_C, signals. What are the expressions for v_D and v_C?

e. Let $v_{in1} = 0.1 \sin(1000t) + 2.0 \sin(377t)$ [mV] and $v_{in2} = 2.01 \sin(377t)$ [mV], which might represent a two-wire voltage signal sent from a sensor to a factory control room in a strong 60 Hz environment. Estimate the output voltage signal, v_{out}, if the transistors Q1 and Q2 are identical and have a static forward current gain of 150 and $r_{\pi 1} = r_{\pi 2} = 4$ kΩ.

f. Estimate the CMRR of this differential amplifier.

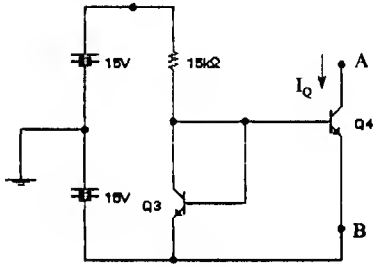

Figure 2a

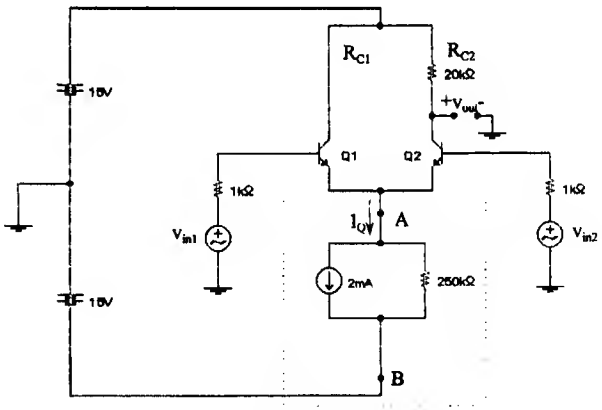

Figure 2b

3. The amplifier circuit shown below in Figure 3 is biased in such a way that both of the Bipolar Junction Transistors are operating in their active regions. Using a D.C. multimeter, the following values were recorded in the laboratory:

$I_{B1} = 80.5\ \mu A$ $I_{C1} = 16.1$ mA $V_{C1} = 17.1$ V $V_{E1} = 1.6$ V
$I_{B2} = 1.51$ mA $I_{C2} = 302$ mA $V_{B2} = 17.1$ V $V_{E2} = 15.2$ V

The internal temperature of the transistors can be assumed to be 25 °C.

a. Is this a good operating point? Why?
b. Sketch the simplified high frequency small signal a.c. model of this amplifier circuit given that $C_{BF1} = C_{BF2} = 19.5$ pF and $C_{BC1} = C_{BC2} = 9.63$ pF.
c. Calculate the approximate high cut-off frequency of the amplifier by completing Table 3.a.
d. Calculate the approximate low cut-off frequency of the amplifier by completing Table 3.b.

Capacitance	R_{EQi}	f_{CHi}	f_{CH}
C_{BE1}	203 Ω	40.2 MHz	
C_{BC1}	?	?	?
C_{BE2}	1.2 Ω	6.8 GHz	
C_{BC2}	690 Ω	24 MHz	

Table 3.a

Capacitance	R_{EQi}	f_{CLi}	f_{CL}
C_1	1255 Ω	1.3 Hz	
C_2	?	?	?
C_3	46 Ω	173 Hz	

Table 3.b

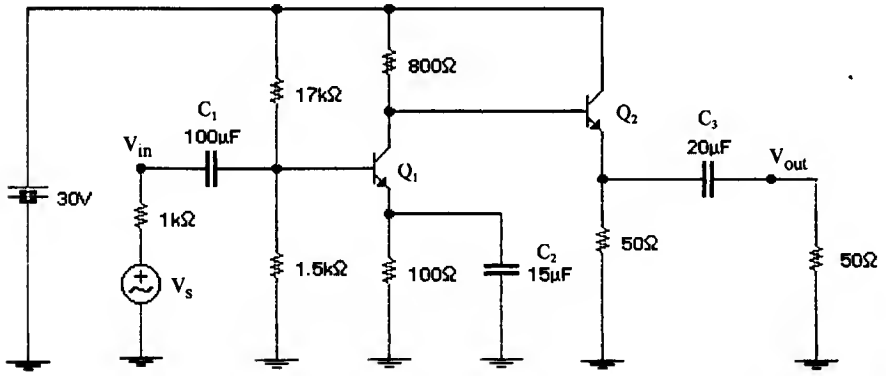

Figure 3

4. Show that the circuit in Figure 4a can be represented by the block diagram in Figure 4b. That is, find the forward gain $G = v_2 / v_1$ by considering the portion of the circuit enclosed within the dashed box, and find feedback gain $H = v_1 / v_2$ by considering that portion of the circuit outside the dashed box. Hint, solve for H in terms of the reactances X_1, X_2 and X_L.

As H is clearly frequency dependent it should not be surprising that for a certain frequency range $H < 0$, and therefore feedback is no longer negative. For the special case when H is a negative real number (that is the imaginary part of $H = 0$), and $GH > 1$ this circuit will begin to oscillate at a unique frequency, ω_0, which can be determined from these two conditions.

For the case where $R_1 = 10$ kΩ, $R_2 = 100$ kΩ, $C_1 = 1$ nF $= C_2$, $L = 2$ mH and $R = 100$ Ω, show that $H = -1$ and find ω_0.

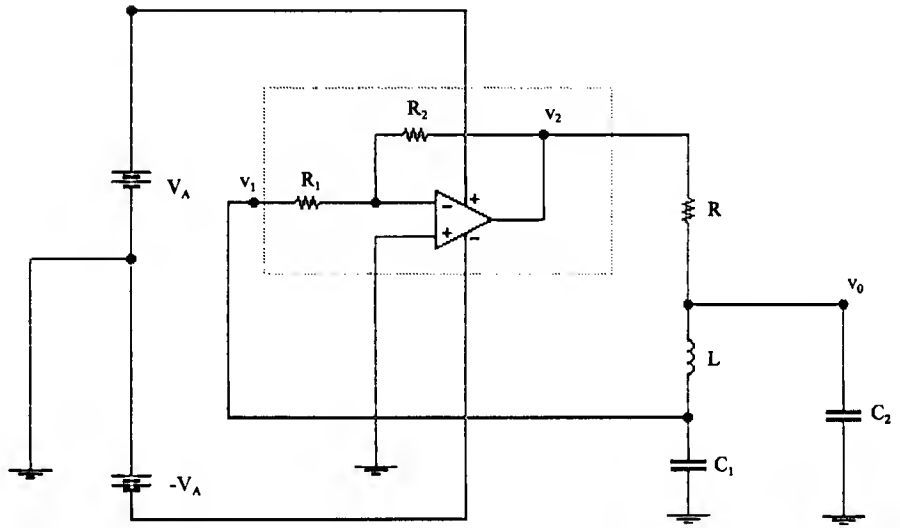

Figure 4a

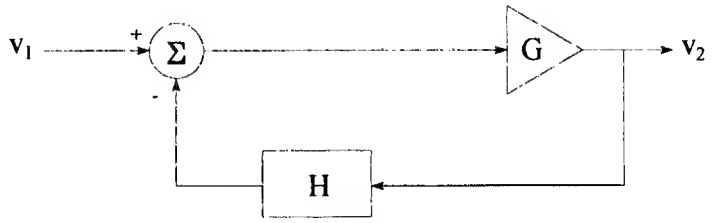

Figure 4b

5. Operational amplifiers are the usual way that differential amplifiers are applied in practice. Even though they are differential amplifier devices themselves, they are often built into higher level linear differential amplifier circuits such as the one shown in Figure 5. In this circuit, a differential amplifier circuit is converted into an instrumentation amplifier with the two buffer input stages. Assuming this instrumentation amplifier is used to measure a strain gauge bridge such as might be used by a structural engineer on a support beam, calculate the output of the instrumentation amplifier, v_{out}, as the beam is loaded given that the unstressed resistance of the strain gauge, R = 2 kΩ, and the strain gauge resistance changes by -1% on the top and +1% on the bottom of the beam as the beam is loaded. Show all the steps of your calculations. Assume that all of the operational amplifiers are ideal.

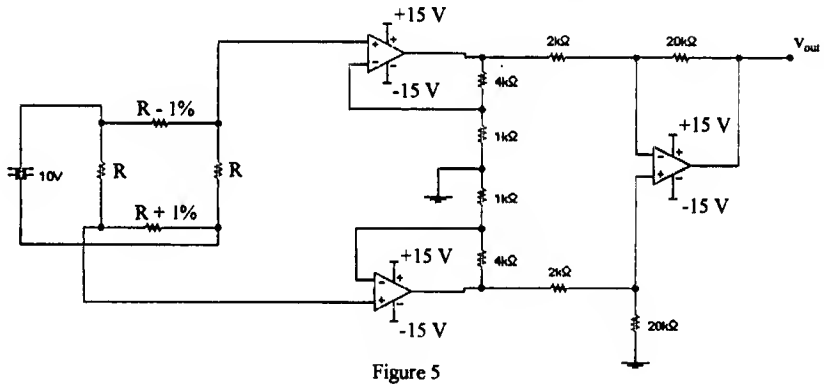

Figure 5

6. For the cascode amplifier circuit in Figure 6 both npn BJT transistors are biased in the active region, and have the following parameters at the quiescent point:

$r_{\pi 1} = 805\ \Omega$ $r_{\pi 2} = 813\ \Omega$ $\beta_1 = \beta_2 = 100$ $C_{BE1} = C_{BE2} = 0.2$ pF $C_{BC1} = C_{BC2} = 0.5$ pF

a. Sketch the mid-band, small-signal a.c. model for this circuit.
b. Find the midband voltage gain, $G_V = v_{out}/v_{in}$.
c. Find the input resistance seen by the source.
d. Sketch the high frequency a.c. model for this circuit.
e. Find the equivalent resistance seen by the capacitance C_{BE2}, and find the corresponding cutoff frequency.

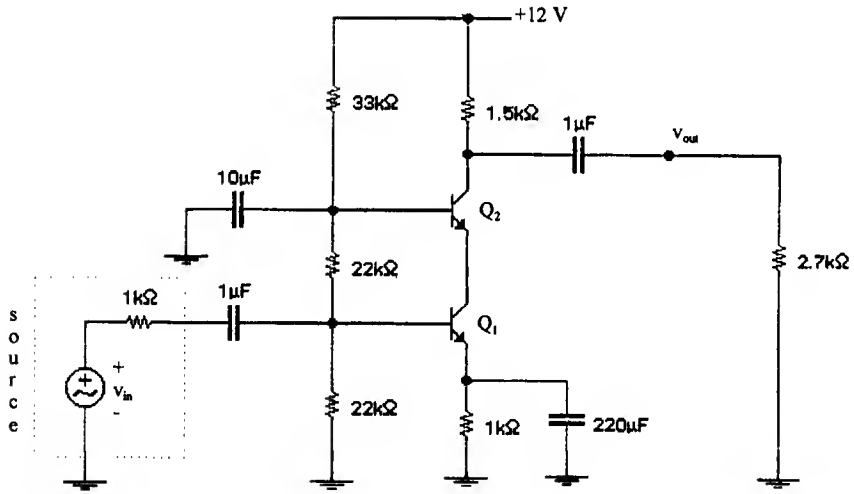

Figure 6

University of Saskatchewan
College of Engineering
EE 321 3 Midterm Examination
Thursday 18 February, 1999

Notes. 80 minutes
2 or 3 sheets of notes allowed

1 A two stage transistor amplifier circuit is shown in Figure 1.
- a) What type of transistor is used in i) the first stage, and ii) the second stage?
- b) In which configuration is the transistor in i) the first stage, and ii) the second stage connected?
- c) Find the operating point of each transistor.
- d) Draw the a.c. small signal model (at midband) for this transistor amplifier circuit. The high frequency model for the BJT, JFET, and MOSFET may be found in Figures 2a),b), and c) respectively.

2. For the amplifier circuit shown in Figure 3, assume that the n-channel enhancement mode MOSFET has a transconductance $g_m = 2$ mS.
- a) Draw the small signal a.c. model (at midband) for the circuit shown in Figure 3.
- b) Find the voltage gain, $G_V = V_{out}/V_{in}$, the input resistance, R_{in}, and the output resistance, R_{out}.
- c) Redraw the small signal model assuming that C_2 is removed.
- d) Determine the voltage gain of the circuit in Figure 3 with C_2 removed.

Bonus Question.
For the Darlington cascade in Figure 4, show that when both transistors are active: $I_C = \beta I_B$, where $\beta = (\beta_1 + 1)(\beta_2 + 1) - 1$. β_1 and β_2 are the static current gains for transistors one and two respectively.

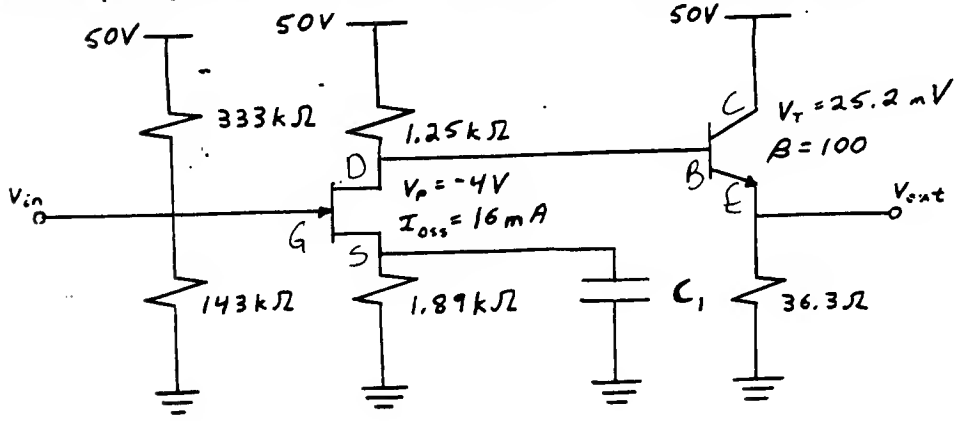

FIGURE 1.

FIGURE 2.

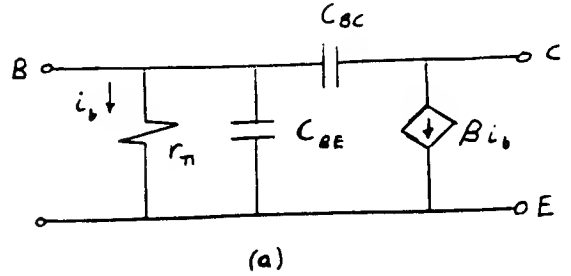

(a)

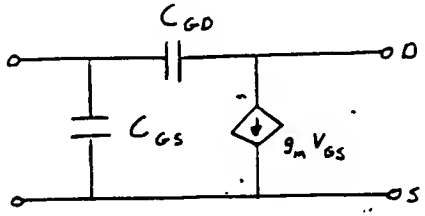

(b)

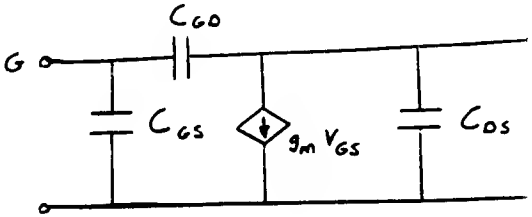

(c)

FIGURE 3.

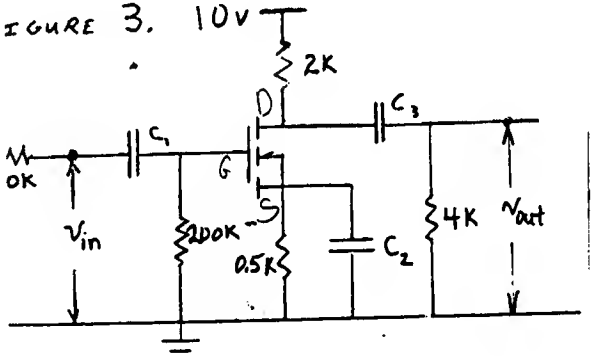

FIGURE 4.

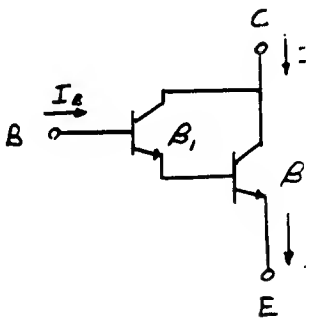

Department of Electrical Engineering
Midterm Examination EE 321.3

Inst: H. Wood
Time: 85 minutes
Notes: Closed book; 2 pages of notes may be used.

Feb. 1998

1. The transistor circuit shown in Figure 1a is to be used as an amplifier. For the transistor, the threshold voltage is +3 Volts. The output characteristic for the transistor is shown in Figure 1b.

a) Describe the type of the transistor and explain how it works to function as a voltage controlled current source.

b) Does Figure 1b accurately represent the behaviour of the transistor in the ohmic range? Why or why not? What use can be made of this type of transistor operating in the ohmic range? (Describe an original application)

c) Draw in the space provided in Figure 1c the transfer characteristic for this transistor for a drain-source potential of +4 volts.

d For this transistor, evaluate the constant (k) in the expression for drain-source current in the saturation region at maximum current. Describe what physical parameters this constant represents.

e) For values of R1=100k, R2=1100k, R3=10.13k, R4=1.67k, plot the load line on the appropriate Figure (1b or 1c).

f) For the same values of resistors as in part e), plot the bias line on the appropriate Figure (1b or 1c). What is the effect on the bias line when the value of R4 is changed?

g) What is the operating point for this circuit? (Find graphically or analytically).

h) What is a reasonable range for an input AC voltage? What is the corresponding range of output voltages for this input range? Sketch the voltage transfer function for this range of inputs and comment on its shape.

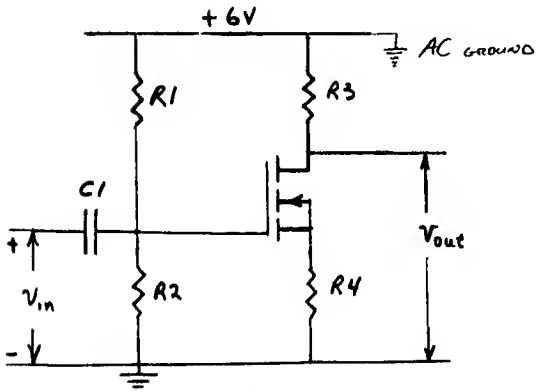

Figure 1a.

College of Engineering
EE 321.3 (cont'd)

NAME: [redacted]

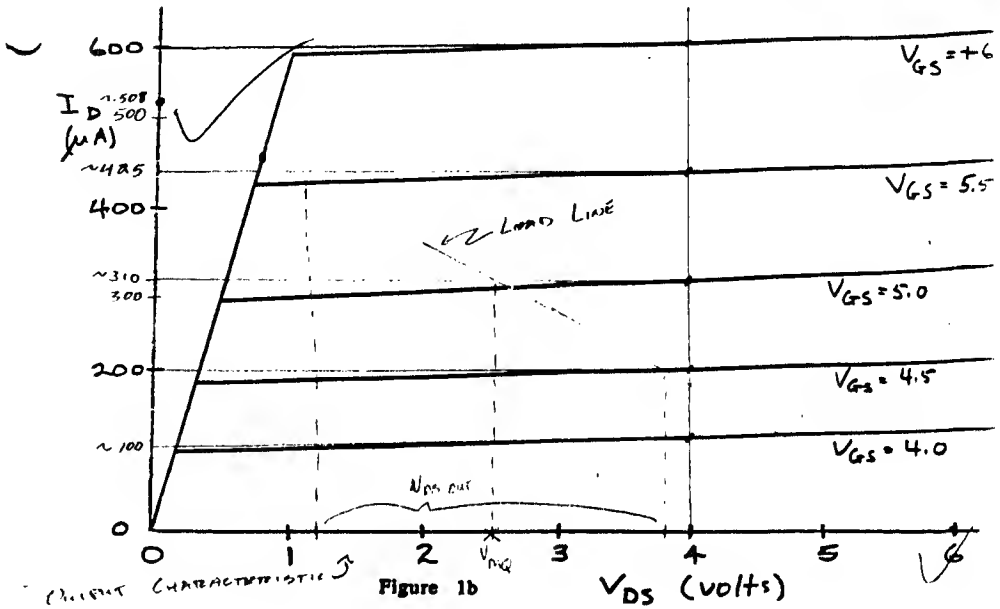

Figure 1b

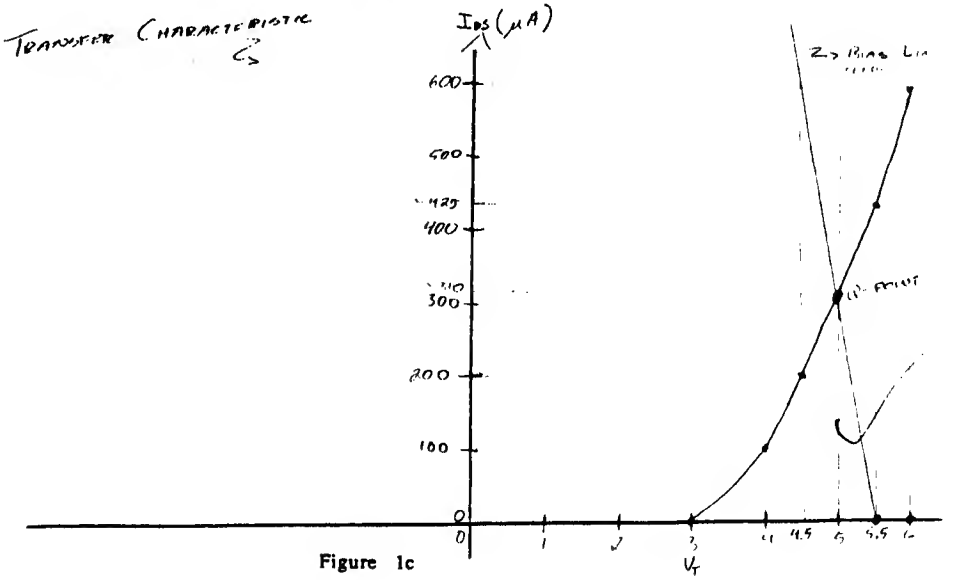

Figure 1c

University of Saskatchewan
College of Engineering
EE 321.3. Midterm Examination

Notes: 85 minutes (one question) March 1997
2 or 3 sheets of notes allowed

1. A transistor amplifier circuit is shown in Figure 1a. The output characteristic of the transistor is shown in Figure 1b.
   a) Briefly describe the type of the transistor and how it works.
   b) Draw in the space provided in Figure 1c the transfer characteristic of this transistor for a drain-source potential of 3.0 V.
   c) Given that the operating (quiescent) point for this amplifier is point A in Figure 1b, find the value of resistor R1 in Figure 1a.
   d) Draw the load line for the amplifier.
   e) Draw a small signal equivalent circuit for this amplifier.
   f) Calculate the small signal voltage gain for a signal frequency of 60 Hz and for a frequency of 6 kHz. Note that the coordinates of point A on the output characteristic are (3 V, 306 microA.) and the coordinates of point B on the same line are (6 V, 316 microA.).

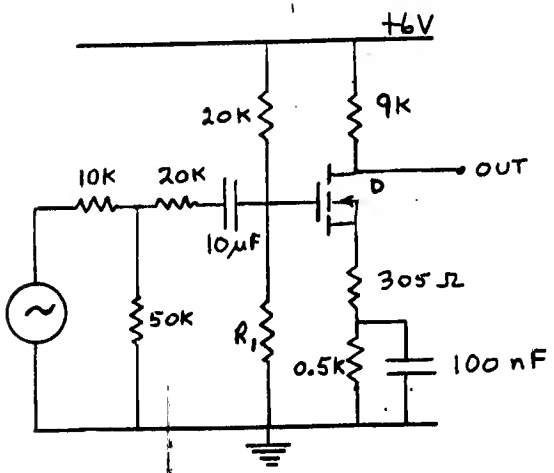

Figure 1a

.....2

College of Engineering
EE 321.3 (cont'd)

NAME: _____

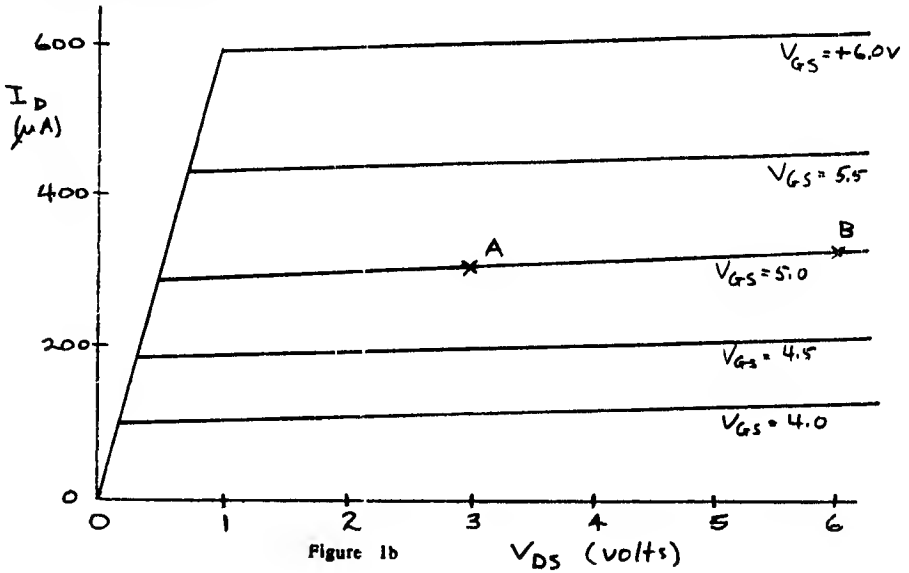

Figure 1b

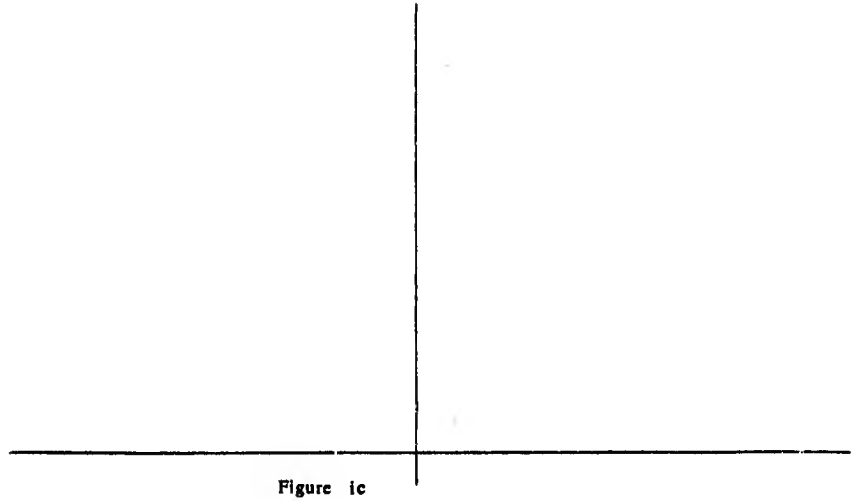

Figure 1c

University of Saskatchewan
College of Engineering
Final Examination, EE 321

Instructor: J.E. Morelli

17 April, 1999

Time: 3 hours (09:00 - 12:00).

Notes: All questions have equal value,
Answer any 5 of the 6 questions,
Closed book examination,
Hand held calculators are allowed.,
Justify all your answers.

1. In the circuit of Figure 1.a), both transistors are identical. Their high frequency a.c. model is shown in Figure 1.b).
   a) Knowing that capacitors C_1, C_2 and C_3 behave like short-circuits at mid-band, sketch the mid-band small-signal a.c. model of the circuit and calculate its voltage gain $v_o(t)/v_i(t)$ as a function of the circuit's components and parameters.
   b) Sketch the high frequency a.c. model of the circuit and calculate the equivalent resistance seen by capacitance C_{GD} of transistor Q_1 as a function of the circuit's components and parameters.

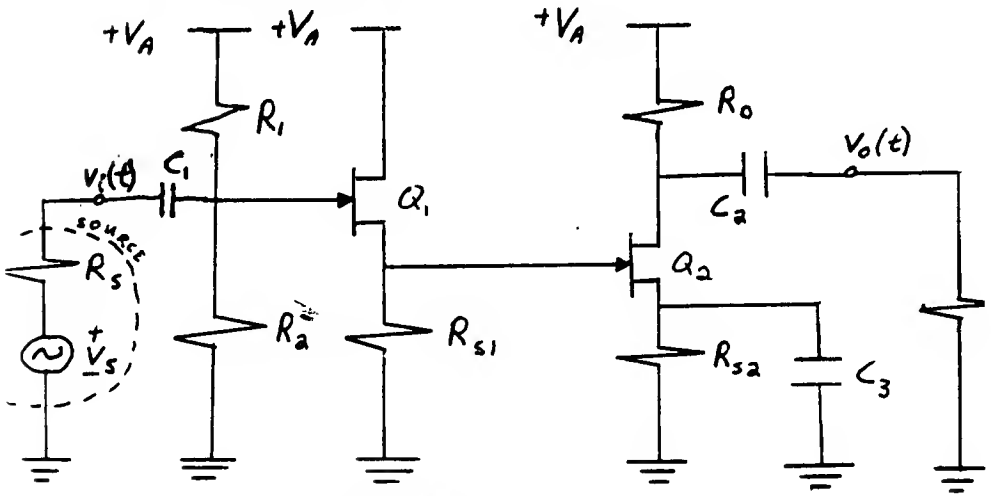

FIGURE 1. a)

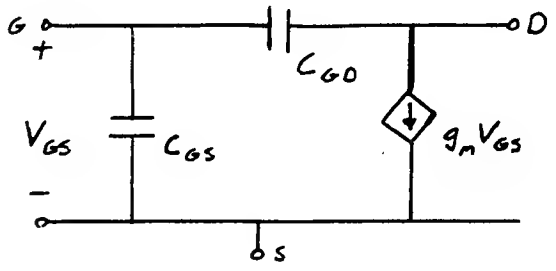

FIGURE 1. b)

2. a) For the common base amplifier circuit shown in Figure 2.a) the transistor is biased in the active region. The high frequency a.c. model of the transistor is given in Figure 2.b).
   i) Sketch the simplified high frequency small-signal a.c. model of the circuit.
   ii) Calculate the high cut-off frequency of the amplifier by completing the following table:

Capacitance	Cut-off frequency affected	R_{eq}	$(2\pi R_{eq} C_i)^{-1}$	Cut-off frequencies
C_{BE}	f_{CH}	?	?	f_{CH} = ?
C_{BC}	f_{CH}	480 Ω	66 MHZ	
C_1	f_{CL}	54.5 Ω	9.7 kHz	f_{CL} = 13 kHz
C_2	f_{CL}	1.91 k Ω	1.7 kHz	
C_3	f_{CL}	500 Ω	1.6 kHz	

   b) Express v_{out} as a function of v_{in1}, v_{in2} and the components of the circuit of Figure 2.c). Hint: all feedback is negative.

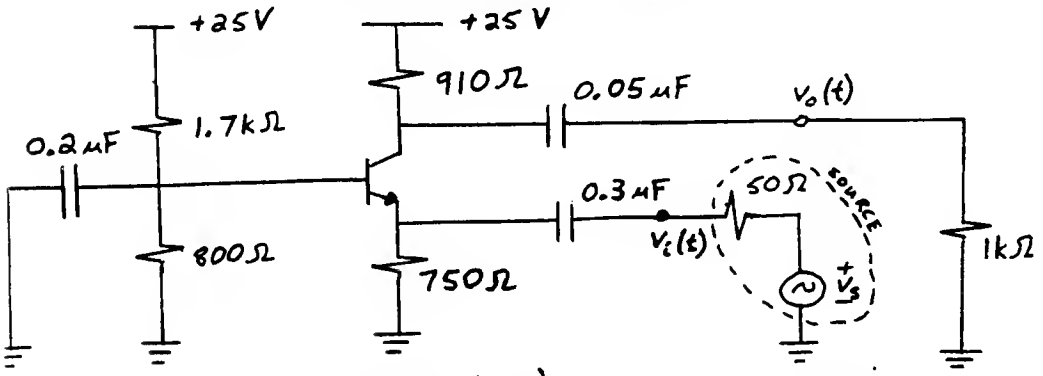

FIGURE 2. a)

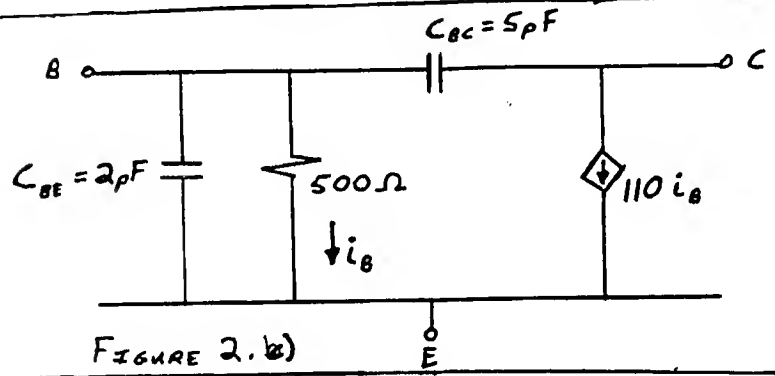

FIGURE 2. b)

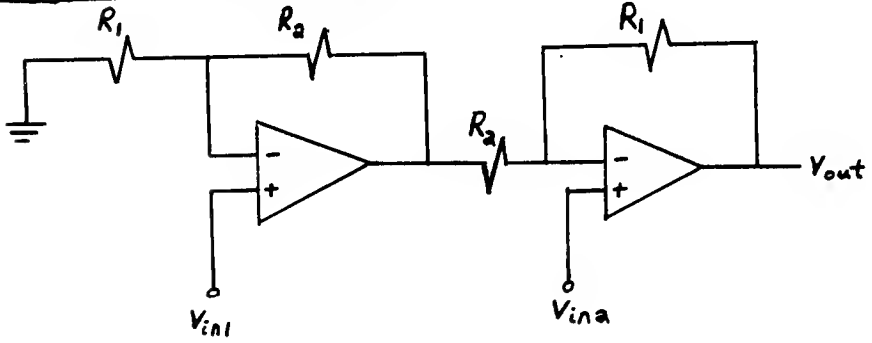

FIGURE 2. c)

3. Consider the circuit of Figure 3. What condition must v_{in1} and v_{in2} satisfy for the diode be forward biased (i.e. the diode is on)? Hint: when the diode is forward biased, all feedback is negative).

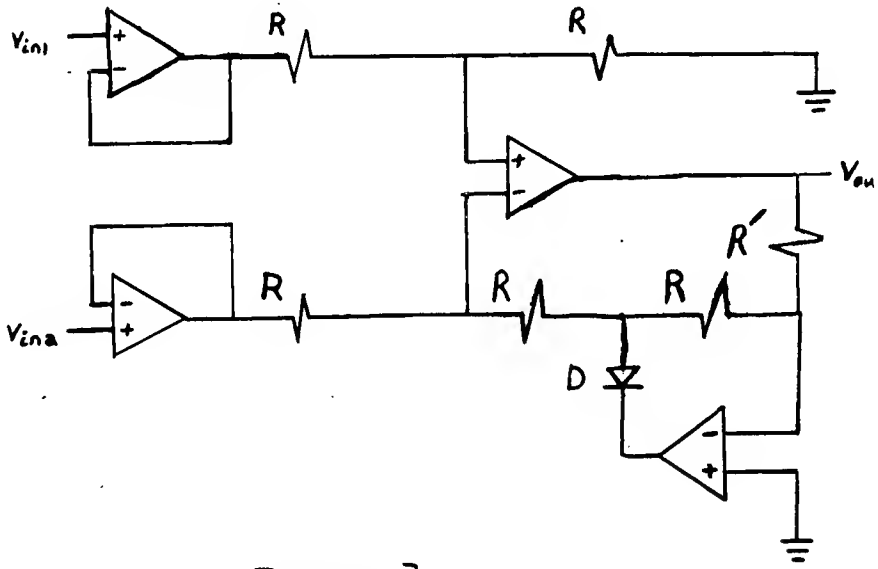

FIGURE 3.

4. The circuit of Figure 4 is a **logarithmic amplifier**. Although this circuit has not been seen in the course its analysis is quite simple. By answering questions a) through e) you will obtain the expression of V_{out} as a function of V_{in}. Both transistors are identical and their static characteristic, I_C versus V_{BE} in the active region is given by:

$$I_C = \beta I_S (e^{(\frac{V_{BE}}{V_T})} - 1) \approx \beta I_S e^{(\frac{V_{BE}}{V_T})}$$

where I_S is the inverse saturation current in the base of the transistor, β is the static current gain ($\beta \gg 1$), and V_T is the thermal voltage ($V_T = 25.2$ mV at 20 °C).

We first notice that when $V_{in} > 0$ and $V_{REF} \gg 1$ volt, then Q_1 and Q_2 are active and the feedback on both operational amplifiers is negative. Moreover, we see from Ohm's Law that:

$$I_{R2} = \frac{V_{REF} - V_A}{R_2} \quad .$$

a) Show that $I_{C2} = \left(\frac{\beta}{\beta+1}\right) I_{R2}$. Since $\beta \gg 1$ conclude that $I_{C2} \approx \frac{V_{REF} - V_A}{R_2}$.

b) Show that $I_{C1} = V_{in} / R_1$.

c) Use the results of a) and b) to show that:

$$V_{BE1} = V_T \ln\left(\frac{V_{in}}{\beta I_S R_1}\right)$$

$$V_{BE2} = V_T \ln\left(\frac{V_{REF} - V_A}{\beta I_S R_2}\right)$$

d) By noticing that $V_A = V_{BE2} - V_{BE1}$, use the result of c) to express V_A as a function of V_{in} and the circuit's components and parameters.

e) Show that when $V_{REF} \gg V_A$, V_{out} is given by:

$$V_{out} = \frac{-V_T(R_3 + R_4)}{R_3} \ln\left(\frac{R_2}{R_1}\frac{V_{in}}{V_{REF}}\right)$$

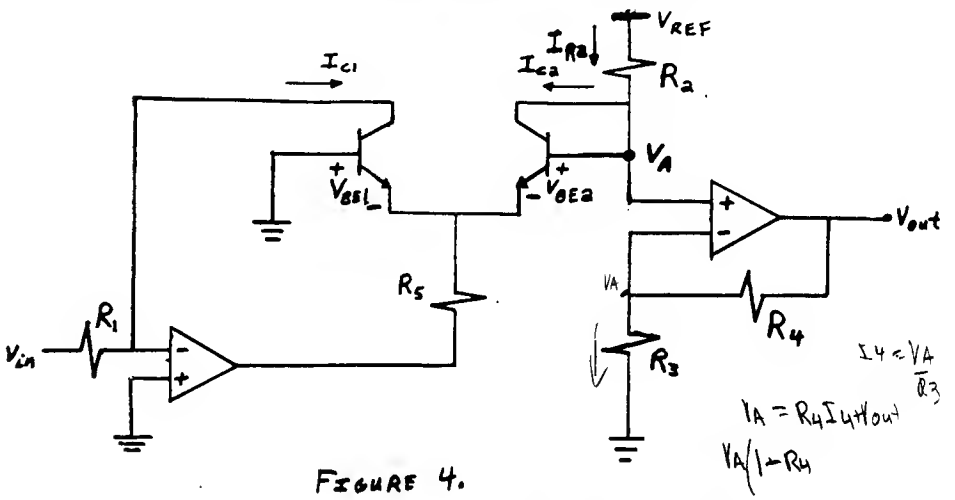

FIGURE 4.

5. In the circuit of Figure 5, $H(\omega)$ represents a linear time-invariant system whose frequency response is given by:

$$H(\omega) = \left(\frac{\omega}{4\omega_c}\right)\left(\frac{2 + j\left(\frac{\omega}{\omega_c}\right)}{8 + j\left(\frac{\omega}{\omega_c}\right)^2}\right)$$

where $\omega_c = 2\pi * 10^3$ rad/s. Calculate the frequency at which the circuit can oscillate, and determine the condition that R_1 and R_2 must satisfy for the circuit to oscillate.

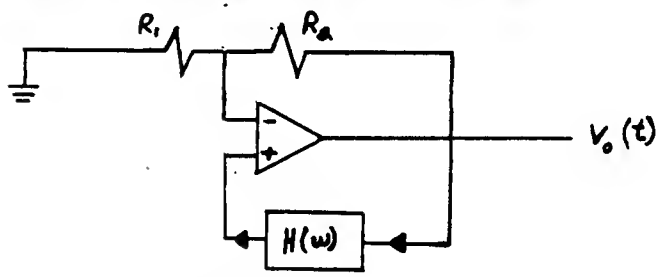

FIGURE 5.

6. The circuit of Figure 6.a) is an astable oscillator. The relation between $v_2(t)$ and $v_1(t)$ is given by:

$$v_2(t) = \frac{-1}{RC}\int v_1(t)\,dt$$

and the relation between $v_1(t)$ and $v_2(t)$ is sketched in Figure 6.b). Express the oscillating frequency of the circuit as a function of the circuit's components and parameters.

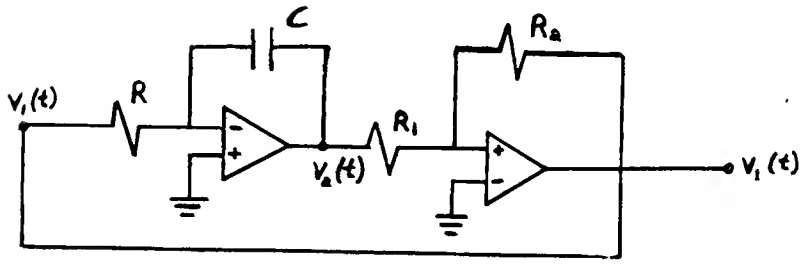

FIGURE 6. a)

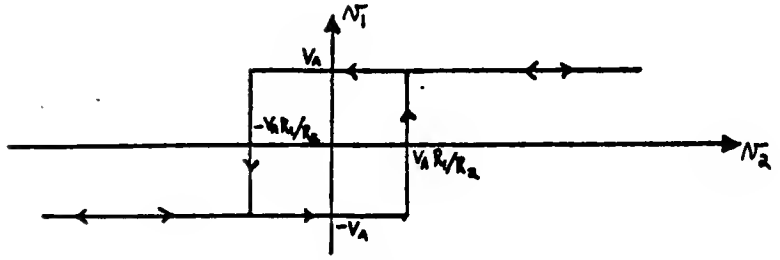

figure 6b

END

HAVE A NICE SUMMER

University of Saskatchewan

EE 342

MIDTERM EXAMINATIONS

Time: 1.5 hours

Note: A formula sheet(s) allowed.

1. Three identical single-phase transformers, each rated 1.2kV/120 V, 7.2 kVA and having a leakage reactance of 0.05 per unit, are connected together to form a three-phase transformer bank. A balanced Y –connected load of 5 ohms per phase is connected across the secondary of the bank. Determine the Y-equivalent per-phase impedance (in ohms and in per unit) seen from the primary side when the transformer bank is connected (a) Y-Y, (b) Y-Δ, (c) Δ-Y, and (d) Δ-Δ

2. A three-phase line is designed with equilateral spacing of 16 m. It is decided to build the line with horizontal spacing ($D_{13} = 2D_{12} = 2D_{23}$) The conductors are transposed. What should be the spacing between adjacent conductors in order to obtain the same inductance as in the original design?

3. A three phase 60 Hz overhead power line is symmetrically supported on a horizontal cross arm. Spacing of the conductors of the power line is $D_{13} = 2D_{12} = 2D_{23}$, and equivalent equilateral spacing is 3m. A telephone line is also symmetrically supported on a horizontal cross arm 1.8m directly below the power line as shown in the figure below. Spacing between the centres of these conductors is 1.0 m. If the current in the power line is 150A, find the voltage per kilometre induced in the telephone line. Discuss the phase relation of the induced voltage with respect to the power line current.

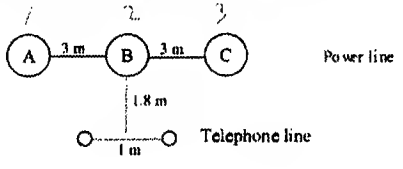

UNIVERSITY OF SASKATCHEWAN
COLLEGE OF ENGINEERING
EE 342 - Power Systems I
Final Examination

December 2001

Instructor: T. Sidhu

Notes: Formula sheet permitted
All questions are of equal value

Q1. The one-line diagram of a three-phase power system is as shown in Figure 1. The transformer reactance is 20 percent on a base of 100 MVA, 23/115 kV and the line impedance is Z = j66.125Ω. The load at bus 2 is S_2 = 184.8 MW + j6.6 Mvar, and at bus 3 is S_3 = 0 MW + j20 Mvar. It is required to hold the voltage at bus 3 at 115∠0° kV. Working in per-unit, determine the voltage at buses 2 and 1.

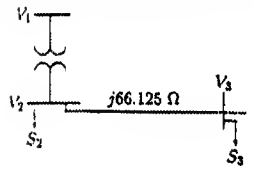

Fig. 1

Q2. One circuit of a single-phase transmission line is composed of three solid 0.5-cm radius wires. The return circuit is composed of two solid 2.5-cm radius wires. The arrangement of conductors is as shown in Figure 2. Applying the concept of the GMD and GMR, find the inductance of the complete line in millihenry per kilometer.

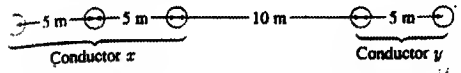

Fig. 2

Q3. A three-phase transposed line is composed of one ACSR 159,000-cmil, 54/19 Lapwing conductor per phase with flat horizontal spacing of 8 m as shown in Figure 3. The GMR of each conductor is 1.515 cm.

(a) Determine the inductance per phase per kilometer of the line.

(b) This line is to be replaced by a two-conductor bundle with 8 m spacing measured from the center of the bundles as shown in Figure 4. The spacing between the conductors in the bundle is 40 cm. If the line inductance per phase is to be 77 percent of the inductance in part (a), what would be the GMR of each new conductor in the bundle?

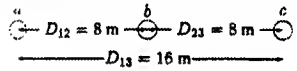

Fig. 3

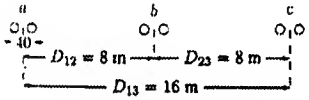

Fig. 4

4. The ABCD constants of a lossless three-phase, 500-kV transmission line are

A = D = 0.86 + j0

B = 0 + j130.2

C = j0.002

(a) Obtain the sending end quantities and the voltage regulation when line delivers 1000 MVA at 0.8 lagging power factor at 500 kV.

To improve the line performance, series capacitors are installed at both ends in each phase of the transmission line. As a result of this, the compensated ABCD constants become

$$\begin{bmatrix} A' & B' \\ C' & D' \end{bmatrix} = \begin{bmatrix} 1 & -1/2jX_c \\ 0 & 1 \end{bmatrix} \begin{bmatrix} A & B \\ C & D \end{bmatrix} \begin{bmatrix} 1 & -1/2jX_c \\ 0 & 1 \end{bmatrix}$$

Where X_c is the total reactance of the series capacitor. If X_c = 100 Ω

(b) Determine the compensated ABCD constants.

(c) Determine the sending end quantities and the voltage regulation when line delivers 1000 MVA at 0.8 lagging power factor at 500 kV.

5. A three-phase 420-kV, 60-HZ transmission line is 463 km long and may be assumed lossless. The line is energized with 420 kV at the sending end. When the load at the receiving end is removed, the voltage at the receiving end is 700 kV, and the per phase sending end current is 646.6 $\angle$ 90°A.

   (a) Find the phase constant β in radians per km and the surge impedance Z_c in Ω.

   (b) Ideal reactors are to be installed at the receiving end to keep $|V_S| = |V_R| = 420$ kV when load is removed. Determine the reactance per phase and the required three-phase kvar.

UNIVERSITY OF SASKATCHEWAN
ELECTRICAL ENGINEERING 304.3
POWER SYSTEMS I

Midterm Examination

Feb. 2001

Time:	1.5 hours
Instructor:	T.S. Sidhu
Notes:	Formula sheet(s) is allowed.
	Answer all questions.

1. The one-line diagram of an unloaded power system is shown in Figure 1. Reactances of the lines are shown in the diagram. The generators and transformers are rated as follows:
Generator 1: 30 MVA, 18kV, X = 20%
Generator 2: 20 MVA, 18 kV, X = 15%
Generator 3: 20 MVA, 15 kV, X = 20%
Three-phase Y-Y transformers: 20 MVA, 138Y/20Y kV, X=10%
Three-phase Y-Δ transformers: 15 MVA, 138Y/13.8Δ kV, X=10%

(a) Draw an equivalent circuit representation of this power system using ohmic values and ideal transformers.
(b) Convert the circuit in part (a) to one where the parameters are expressed in per unit. Use a base value of 100 kVA, 138 kV in the 40 Ω line.

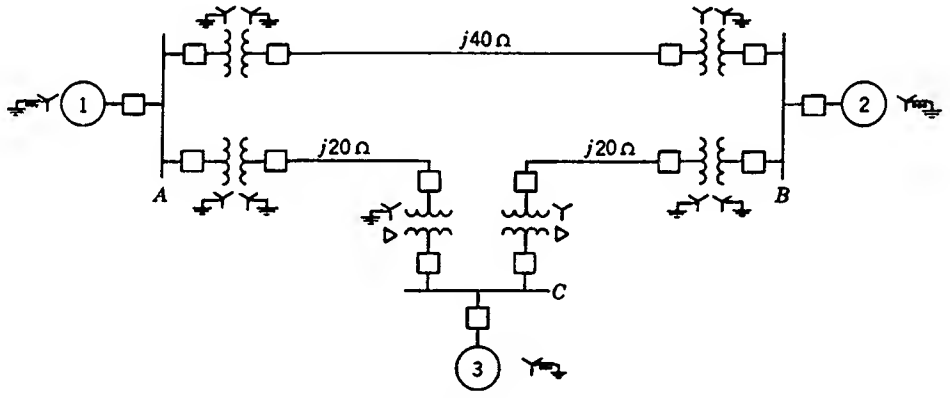

Fig. 1.

2. A balanced delta-connected load consisting of pure resistances of 18 ohms per phase is in parallel with a purely resistive balanced wye-connected load of 12 ohms per phase. The combination is connected to a three-phase balanced supply of 346.41 V rms (line-to-line) via a three-phase line having an inductive reactance of j3.0 ohms per phase. Taking the phase voltage V_{an} as reference, determine

(a) The current, real power, and reactive power drawn from the supply.
(b) The line-to-neutral and the line-to-line voltage of phase 'a' at the combined load terminals.

3. A three-phase 60-Hz line has its conductors arranged in a triangular formation so that two of the distances between centers of the conductors are 10 m and the third distance is 15 m. Each conductor is composed of seven equal strands. The diameter of each strand is 0.5 cm
(i) Show that the GMR for the conductor is 2.177 times the radius of each strand.
(ii) Find the inductance of the line in mH/km.
(iii) It is decided to build the line with horizontal spacing ($D_{13} = 2D_{12} = 2D_{23}$). The line is transposed. What should be the spacing between adjecent conductors in order to obtain the same inductance as in the original design described earlier.

University of Saskatchewan
College of Engineering
EE 304.3
Power Systems I

Final Examination

April 2001

Instructor: T.S. Sidhu
Time: 3 hrs.
Notes: A formula sheet is allowed.

---

1. The three-phase power and line-line ratings of the electrical power system shown in Figure 1 are given below.

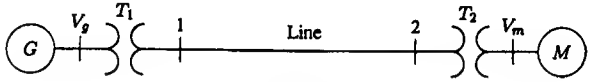

Figure 1

G_1:	60 MVA	20 kV	X = 9%	0.15
T_1:	50 MVA	20/200 kV	X = 10%	0.2
T_2:	50 MVA	200/20 kV	X = 10%	0.2
M:	43.2 MVA	18 kV	X = 8%	0.15
Line:		200 kV	Z = 120 + j200 Ω	0.3+j0.5

(a) Draw an impedance diagram showing all impedances in per-unit on a 100-MVA base. Choose 20 kV as the voltage base for generator.

(b) The motor is drawing 45 MVA, 0.80 power factor lagging at a line-to-line terminal voltage of 18 kV. Determine the terminal voltage and the internal emf of the generator in per-unit and in kV. EMF=6.6∠-42.7 kV 0.33∠-22.7 pu

V_G = 6.95∠35.2 kV V_G = 0.3295∠35.2 pu

2. A three-phase transposed line is composed of one ACSR 159,000-cmil, 54/19 Lapwing conductor per phase with flat horizontal spacing of 8 m as shown in Figure 2. The *GMR* of each conductor is 1.515 cm.

...(2

(a) Determine the inductance per phase per kilometer of the line.

L = 1.3 mH/km

(b) This line is to be replaced by a two-conductor bundle with 8 m spacing measured from the center of the bundles as shown in Figure 3. The spacing between the conductors in the bundle is 40 cm. If the line inductance per phase is to be 77 percent of the inductance in part (a), what would be the *GMR* of each new conductor in the bundle?

GMR = 1.14 cm

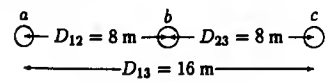

Figure 2

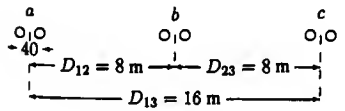

Figure 3

3. The conductors of a double-circuit three-phase transmission line are placed on the corner of a hexagon as shown in Figure 4. The two circuits are in parallel and are sharing the balanced load equally. The conductors of the circuits are identical, each having a radius *r*. Assume that the line is symmetrically transposed. Using the method of *GMD*, determine an expression for the capacitance per phase per meter of the line.

95 pF/m

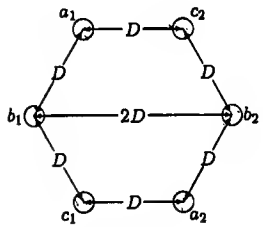

Figure 4

...(3

4. The ABCD constants of a lossless three-phase, 500-kV transmission line are

$$A = D = 0.86 + j0$$
$$B = 0 + j130.2$$
$$C = j0.002$$

(a) Obtain the sending end quantities and the voltage regulation when line delivers 1000 MVA at 0.8 lagging power factor at 500 kV.

$V_S = 682\angle 34.8$ kV $I_S = 2670.6\angle -26.9$ A

To improve the line performance, series capacitors are installed at both ends in each phase of the transmission line. As a result of this, the compensated ABCD constants become

$$\begin{bmatrix} A' & B' \\ C' & D' \end{bmatrix} = \begin{bmatrix} 1 & -\frac{1}{2}jX_c \\ 0 & 1 \end{bmatrix} \begin{bmatrix} A & B \\ C & D \end{bmatrix} \begin{bmatrix} 1 & -\frac{1}{2}jX_c \\ 0 & 1 \end{bmatrix}$$

where X_c is the total reactance of the series capacitor. If $X_c = 100\ \Omega$

(b) Determine the compensated ABCD constants.

$A = D = 0.96$ $B = j39.2$ $C = j0.002$

(c) Determine the sending end quantities and the voltage regulation when line delivers 1000 MVA at 0.8 lagging power factor at 500 kV.

$V_S = 374.6\angle 16.8$ kV

$I_S = 3014\angle -28.1$ A

5. (a) Two plants are interconnected by a transmission line as shown in Figure 5. The only load is located at plant 2. When 350 MW is transmitted from plant 1 to plant 2, power loss in the line is 20 MW. Compute the required generation from plant 1 and plant 2 for economic operation if the load to be supplied is 500 MW.

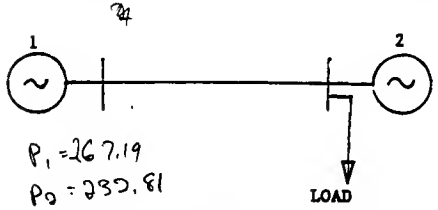

$P_1 = 267.19$

$P_2 = 232.81$

Figure 5

...(4

Assume the incremental fuel costs can be given as follows:

$$\frac{dF_1}{dP_1} = 0.01\,P_1 + 9.0\ \$/MWH$$

$$\frac{dF_2}{dP_2} = 0.015\,P_2 + 8.0\ \$/MWH$$

(b) Determine the required generation from plant 1 and plant 2 to supply a load of 500 MW when the transmission losses are not included in "economic scheduling". However, these losses are to be supplied by the plants.

$P_1 = 269.2$

$P_2 = 246.1$

***** The End *****

University of Saskatchewan
College of Engineering
EE 304 - Power Systems I
Midterm Examination

February 2000

Time: 1.5 hrs.
Note: All questions are of equal value.

---

1. Consider a single-phase load with an applied voltage $v(t) = 150 \cos(\omega t + 10°)$ volts and load current $i(t) = 5 \cos(\omega t - 50°)$ A.

   (a) Determine the real and reactive power. Show and indicate if each power is being absorbed or supplied.

   (b) Find the power factor and specify whether it is leading or lagging.

   (c) Calculate the reactive power supplied by capacitors in parallel with the load that changes the power factor to 0.9 lagging.

2. Three identical single-phase transformers, each rated 1.2 kV/120V, 7.2 kVA and having a leakage reactance of 0.05 per unit, are connected to form a three-phase bank. A balanced Y-connected load of 5Ω per phase is connected across the secondary of the bank. Determine the Y-equivalent per-phase impedance (in ohms and in per unit) seen from the primary side when the transformer bank is connected as:

   (a) Y-Y
   (b) Y-Δ
   (c) Δ - Y, and
   (d) Δ - Δ

3. (i) A 60 Hz single-phase, two-wire overhead line has solid cylindrical copper conductors with 1.5 cm. diameter. The conductors are arranged in horizontal configuration with 0.5 m spacing. Calculate in mH/km:

   (a) the inductance of each conductor due to internal flux linkages only,

   (b) inductance of each conductor due to both internal and external flux linkages, and

   (c) the total inductance of the line.

   (ii) Redo (i) if the diameter of each conductor is:

   (a) increased by 25% to 1.875 cm,

   (b) decreased by 25% to 1.125 cm, without changing the phase spacing. Compare the results with those of (i).

University of Saskatchewan
College of Engineering
EE 304.3
Power Systems I

Final Examination

April 2000

Instructor: T.S. Sidhu
Time: 3 hrs.
Notes: Formula sheet(s) is allowed.
Answer **all** questions; all questions are of equal value.
Show all the steps used for arriving at the solution.

---

1. (a) The single-line diagram of the power system is shown in Figure 1. Equipment ratings are as follows:

   Generator 1: 750MVA, 18kV, X = 0.2 p.u.
   Generator 2: 750MVA, 18kV, X = 0.2 p.u.
   Syn. Motor 3: 1500MVA, 20kV, X = 0.2 p.u.

   3-phase Δ-Y transformers: 750MVA, 500kV Y/20kVΔ,
   (T_1, T_2, T_3, T_4) X = 0.1 p.u.

   3-phase Y-Y transformers: 1500MVA, 500kV Y/20kVY ,
   (T_5) X = 0.1 p.u.

   Draw the reactance diagram and determine the per unit reactances by using a base of 100MVA and 500kV for the 40-ohm line.

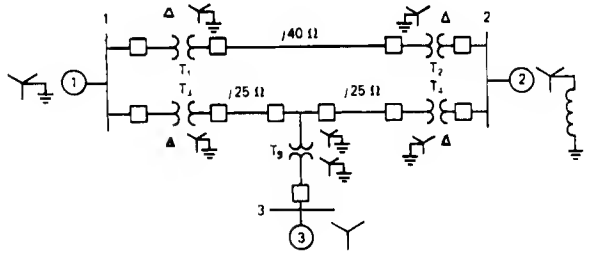

Figure 1

....(2

(b) For the power system in Problem 1(a), the synchronous motor absorbs 1200MW at 0.8 power factor leading with the bus 3 voltage at 18kV. Determine the bus 1 and bus 2 voltages in kV. Assume that generators 1 and 2 deliver equal real powers and equal reactive powers. Assume a balanced three-phase system.

2. (a) Find the GMR of each of the unconventional conductors shown in Figure 2 in terms of a (the envelope radius).

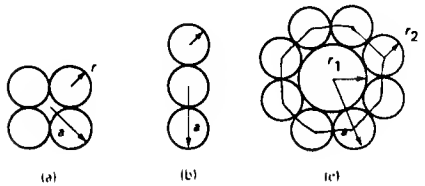

Figure 2

(b) Determine the inductance in H/Km of the double-circuit line shown in Figure 3. The radius of each conductor is 0.03 m.

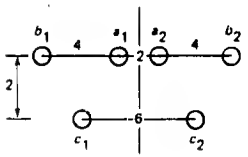

Note: -Assume that the line is transposed.
-All distances in meters.

Figure 3

....(3

3. (a) A 500-km 500-kV, 60-Hz three-phase uncompensated line has a series impedance z = 0.03 + j0.35Ω/km and a shunt admittance $y = j4.4 \times 10^{-6}$ ℧/ km.
Calculate: (i) γl
(ii) the exact ABCD parameters of this line.

(b) At full load, the line in Problem 3(a) delivers 1000MW at unity p.f. and at 475 kV.
Calculate: (i) the sending-end voltage,
(ii) the sending-end current,
(iii) the sending-end power factor and
(iv) the percentage voltage regulation.

(c) Recalculate the percentage voltage regulation when identical shunt reactors are installed at both ends of the line during light loads, providing 70% total compensation. The reactors are removed at full load.

4. (a) A power system has only two generating plants, and power is being dispatched economically with P_1 = 140MW and P_2 = 250MW. The loss coefficients are:

$B_{11} = 0.10 \times 10^{-2}$ MW^{-1}
$B_{12} = -0.01 \times 10^{-2}$ MW^{-1}
$B_{22} = 0.13 \times 10^{-2}$ MW^{-1}

To raise the total load on the system by 1MW will cost an additional $12 per hour.
Find: (a) the penalty factor for plant 1, and
(b) the additional cost per hour to increase the output of this plant by 1MW.

(b) A power system is operating on economic load dispatch with a system incremental cost of $12.5 per megawatt hour. If raising the output of plant 2 by 100KW (while other outputs are kept constant) results in increased $|I|^2 R$ losses of 12KW for the system, what is the approximate additional cost per hour if the output of this plant is increased by 1MW?

*** The End ***

UNIVERSITY OF SASKATCHEWAN
ELECTRICAL ENGINEERING 304.3
POWER SYSTEMS I

Midterm Examination

March 1999

Time: 2 hours
Instructor: T.S. Sidhu
Notes: Formula sheet(s) is allowed.
Answer all questions.

1. A balanced delta-connected load consisting of pure resistances of 18 ohms per phase is in parallel with a purely resistive balanced wye-connected load of 12 ohms per phase as shown in Fig. 1. The combination is connected to a three-phase balanced supply of 346.41 V rms (line-to-line) via a three-phase line having an inductive reactance of j3.0 ohms per phase. Taking the phase voltage V_{an} as reference, determine

(a) The current, real power, and reactive power drawn from the supply.
(b) The line-to-neutral and the line-to-line voltage of phase 'a' at the combined load terminals.

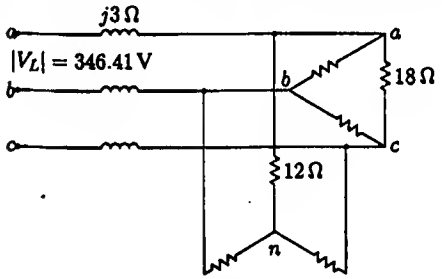

Fig. 1.

2.(a) The one-line diagram of a three-phase power system is shown in Fig. 2. Impedances are marked in per-unit on a 100-MVA, 400-kV base. The load at bus 2 is S_2=15.93 MW-j33.4 Mvar, and at bus 3 is S_3=77 MW+j 14 Mvar. It is required to hold the voltage at bus 3 at 400∠0 kV. Working in per unit, determine the voltages at buses 2 and 1 (in per-unit and in kV).

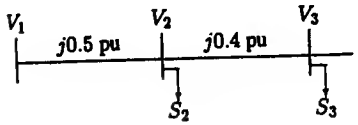

Fig. 2.

3. A three-phase, 60-Hz transposed transmission line has a flat horizontal configuration as shown in Fig. 3. The line reactance is 0.486 ohms per kilometer. The conductor geometric mean radius is 2.0 cm. Determine the phase spacing D in meters.

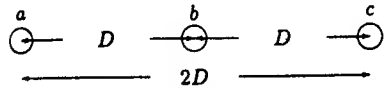

Fig. 3

4. A 60-Hz single-phase power line and a telephone line are parallel to each other as shown in Fig. 4. The telephone line is symmetrically positioned directly below conductor b. The power line carries an rms current of 226 A. Assume zero current flows in the ungrounded telephone wires. Find the magnitude of the voltage per kilometer induced in the telephone line.

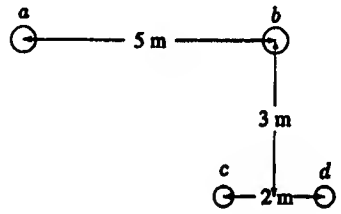

Fig. 4.

University of Saskatchewan
College of Engineering
EE 304 - Power Systems I
Midterm Examination

February 1998

Instructor: T.S. Sidhu
Time Allowed: 2 hours
Note: Answer all questions; formula sheet is allowed.

Marks

(25) 1. The one-line diagram of a three-phase system is shown in Figure 1. The ratings and impedance values of various elements are also shown in this figure.

(a) Draw an equivalent circuit representation of this power system using ideal transformers and ohmic values of impedances.

(b) Convert the circuit in part (a) to one where the parameters are expressed in per unit. Use a base of 100 MVA and 15 kV in the motor circuit.

(15) 2. A balanced three-phase load consisting of an impedance of 30 + j30Ω/phase is connected to a 12.47-kV three-phase, four wire wye-connected source. A power factor correction capacitor bank having an impedance of -j74Ω/phase is connected to the load bus in parallel with the load. The feeder supplying this load has an impedance of 1.5 + j4.0Ω/phase.

(a) Line current in phases A, B and C of the feeder.

(b) Line to neutral voltage of phase A at the load.

(c) Active and reactive power consumed at the load bus.

(d) Active power loss per phase occurring in the feeder.

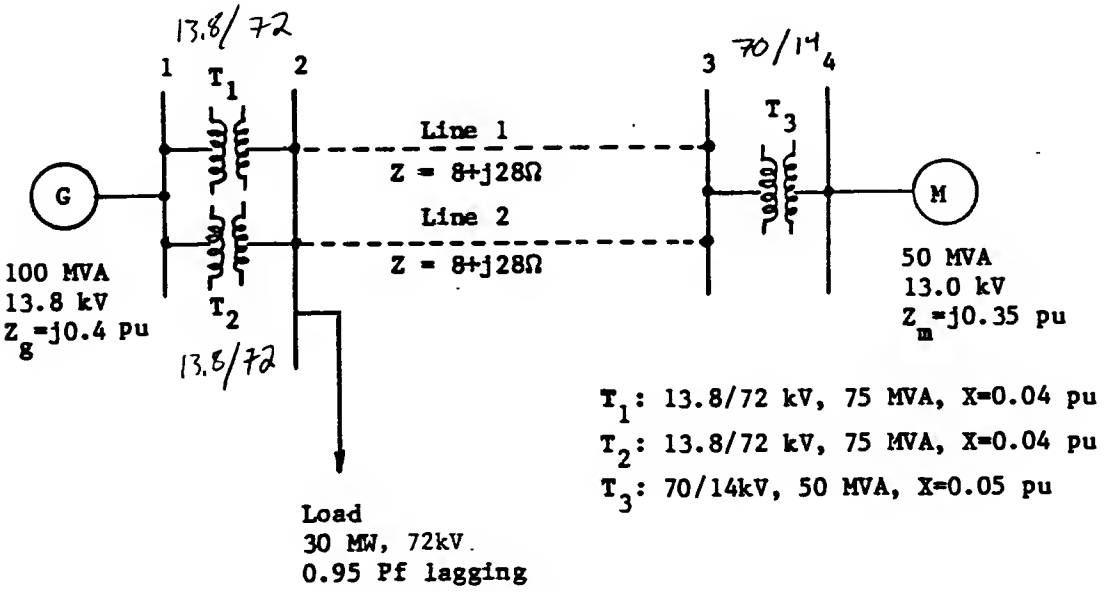

Figure 1

The End

University of Saskatchewan
College of Engineering
EE 304 - Power Systems 1
Final Examination

April 1999

Instructor: T.S. Sidhu
Time Allowed: 3 hours
Notes: All questions are of equal value.
Show all the steps used to arrive at the solution.
Formula sheet(s) are allowed.

Q1. The three-phase power and line-line ratings of the electric power system shown in Figure 1 are given below:

G_1: 60 MVA, 20 kV, X = 9%
T_1: 50 MVA, 20/200 kV, X = 10%
T_2: 50 MVA, 200/20 kV, X = 10%
M: 43.2 MVA, 18 kV, X = 8%
Line: 200 kV, Z = 120 + j 200 Ω

(a) Draw an impedance diagram showing all impedances in per-unit on a 100-MVA base. Choose 20 kV as the base voltage for generator.

(b) The motor is drawing 45 MVA, 0.8 power factor lagging at a line-to-line terminal voltage of 18 kV. Determine the terminal voltage and the internal EMF of the generator in per-unit and in kV.

Figure 1

Q2. A three-phase, 60-Hz untransposed transmission line runs in parallel with a telephone line for 20 km. The power line carries a balanced three-phase rms current of $I_a = 320\angle 0°$ A, $I_b = 320\angle -120°$ A and $I_c = 320\angle -240°$ A. The line configuration is as shown in Figure 2. Assume zero current flows in the ungrounded telephone wires. Find the magnitude of the voltage induced in the telephone line.

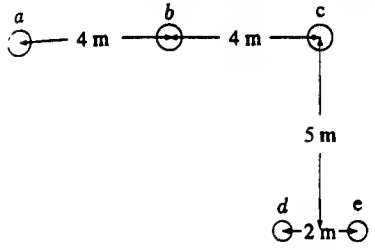

Figure 2

.../2

Q3. (a) Two single-phase lines are running parallel to each other as shown in Figure 3.

The radius of each conductor is r meters. Other distances are as marked in Figure 3 and are in meters. Consider that the charge on conductors of Line 2 is half of that of the conductors of Line 1. Derive an expression for capacitance to neutral for Line 1 in terms of conductor radius (r) and other distances (i.e. D_1, D and D_2).

(b) Using the expression derived in (a), determine the value of capacitance to neutral of Line 1 if

r = 2.5 cm
$D_1 = D_2 = 5$ m
D = 10 m

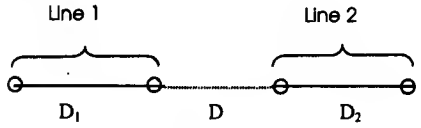

Figure 3

Q4. A 230-kV, three-phase transmission line has a per phase series impedance of z = 0.05 + j 0.45 Ω per km and a per phase shunt admittance of $y = j\ 3.4 \times 10^{-6}$ siemens per km. The line is 80 km long. Using the nominal-π model, determine:

(a) The transmission line ABCD constants.

(b) Find the sending-end voltage and current, voltage regulation, the sending-end power and the transmission efficiency when line delivers 200 MVA, 0.8 lagging power factor at 220 kV.

(c) Shunt capacities are installed at the receiving end to improve line performance. Determine the total Mvar and the capacitance per phase of the Y-connected capacitors when sending end voltage is 220 kV. The line delivers 200 MVA, 0.8 lagging power factor at 220 kV.

Q5. The fuel-costs in $/h for two 800 MW thermal plants are given by:

$$F_1 = 400 + 6.0\,P_1 + 0.004\,P_1^2$$
$$F_2 = 500 + \beta P_2 + \gamma P_2^2$$

where P_1 and P_2 are in MW.

(a) If the incremental cost of power (λ) is $8/MWh when the total power demand is 550 MW neglecting losses, determine the optimal generation of each plant.

(b) If the incremental cost of power (λ) is $10/MWh when the total power demand is 1300 MW neglecting losses, determine the optimal generation of each plant.

(c) From the results of (a) and (b) find the value of coefficients β and γ for the fuel-cost of the second plant.

The End

University of Saskatchewan
College of Engineering
EE 304 - Power Systems I
Final Examination

April 1998

Instructor: T.S. Sidhu
Time Allowed: 3 hours
Notes: Formula sheet(s) allowed.
Answer all questions; all questions are of equal value.
Show all the steps used to arrive at the solution.

The one-line diagram of a three-phase system is shown in Figure 1. Reactances of the two sections of transmission lines are shown in the diagram. The generators and transformers are rated as follows:

Generator 1: 15 MVA, 13.8 kV, X = 0.15 p.u.

Generator 2: 30 MVA, 15 kV, X = 0.2 p.u.

Generator 3: 20 MVA, 20 kV, X = 0.2 p.u.

Transformer 1: 20 MVA, 13.8/220kV, Delta-Wye, X = 10%

Transformer 2: Single-phase units each rated 10 MVA, 18/127 kV, X = 10%

Transformer 3: 30 MVA, 20/220 kV, Wye-Wye, X = 10%

Draw the circuit diagram showing impedances in per unit and marked with letters to indicate points corresponding the one-line diagram. Choose a base of 100 MVA, 13.8 kV in the circuit of Generator 1.

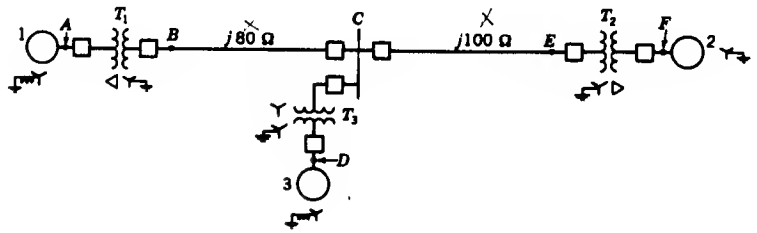

Figure 1

.../2

Calculate the inductance and capacitance of the double-circuit, bundled three-phase line shown in Figure 2. All distances in the figure are marked in meters. Neglect the effect of ground. Consider that the radius of each conductor in the bundle is 0.015 m.

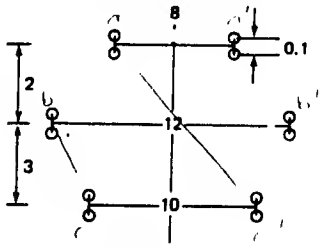

Figure 2

The AB&D constants of a three-phase transmission line are:

A = 0.9 /0.95°
B = 100.0 /80° Ω
D = A

The magnitudes of the sending end and receiving end voltages are 500 and 490 kV respectively. The real power being received is 1000 MW.

(a) Calculate the C constant of the line.

(b) Calculate the phase angle displacement between the voltages at the sending end and receiving end of the line.

(c) How much complex power will the line deliver if the phase displacement between the sending- and receiving-end voltages is 35°?

(d) Calculate the maximum power that can be delivered by the line.

.../3

4 A power system has two generating units operating on economic dispatch. The operating costs of these units are given by

$$F_1 = \begin{cases} 2P_1 + 0.02P_1^2 \text{ (\$/hr) for } 0 < P_1 \leq 100 \text{ MW} \\ 6P_1 \text{ (\$/hr) for } P_1 > 100 \text{ MW} \end{cases}$$

$$F_2 = 0.03\,P_2^2 \text{ (\$/hr)}$$

where P_1 and P_2 are in MW.

(a) Determine the power output of each unit that minimizes the total operating cost as total required power (P_R) varies from 200 to 700 MW.

Neglect transmission losses.

(b) If the total transmission losses for the system are given by

$$P_L = 2 \times 10^{-4} P_1^2 + 1 \times 10^{-4} P_2^2 \text{ (MW)}.$$

Perform economic dispatch calculations for a total required power of 290 MW.

The End

Name: [redacted]

d)

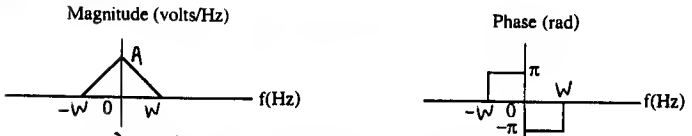

This time function is not real because it has negative phase.

0

e) $g(t) \leftrightarrow G(f) = G_{real}(f) + jG_{imag}(f)$

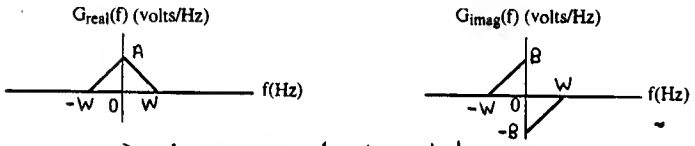

This time function is not real, because it has an imaginary component to it.

0

15/10

Name: [redacted]

20/20

351.3 Spectrum Analysis and Discrete-Time Systems

Term Test, October 22/02, Time: 2 hours; Closed Book

All questions are of equal value but not necessarily of equal difficulty. Please label and scale your graphs and do not forget units. Finally explain and justify your solutions.

1. Which double-sided spectrum represents a **real** time function. Marks are given only for your reason(s).

a)

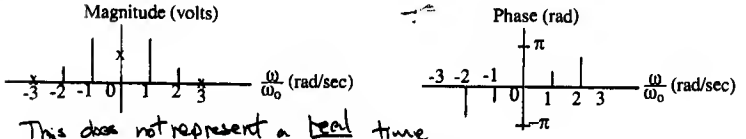

This does not represent a real time function, because, the phase component is negative on one side of the y-axis, and positive on the other, which adds an imaginary element to it.

0

b)

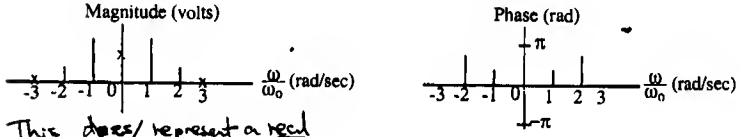

This does represent a real time function, because the phase has no negative components

0

c)

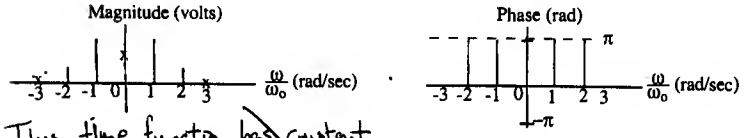

This time function has constant phase of π and thus is a real time function.

Yes, but reasoning is not quite correct.

15

$\sqrt{(\sqrt{2})^2+(\sqrt{2})^2} = \sqrt{4} = 2 \qquad \sqrt{(\sqrt{3})^2+1^2} = \sqrt{4} = 2$

Name: [redacted]

3. a) Determine the double-sided spectrum of
$f(t) = \sqrt{2}\cos(\pi t) + \sqrt{2}\sin(\pi t) + 2\cos(3\pi t) + \cos(4\pi t) + \sqrt{3}\sin(4\pi t)$ (amps).

$= 2\cos(\pi t - \pi/4) + 2\cos(3\pi t) + 2\cos(4\pi t - \pi/3)$ (amps)

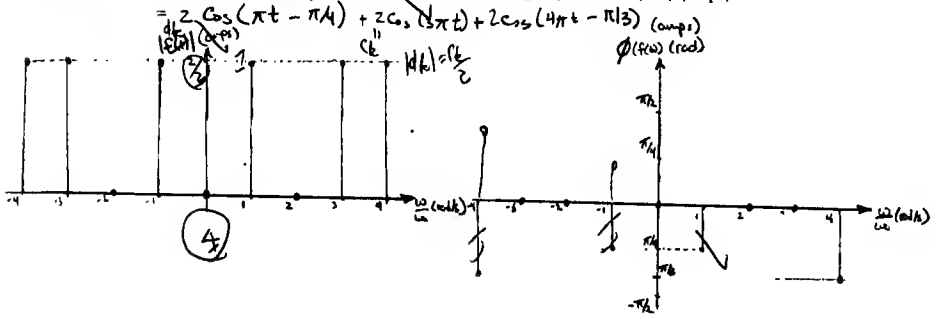

b) Consider two time functions $f_1(t)$, $f_2(t)$ with Fourier transforms $F_1(f)$, $F_2(f)$ shown below.

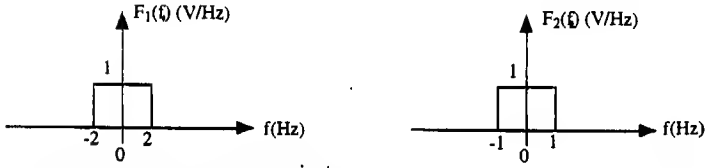

Determine and draw the spectrum of $g(t) = f_1(t)f_2(t)$.

$x(t)*y(t) \triangleq \int_{-\infty}^{\infty} X(\lambda)Y(f-\lambda)\,d\lambda$ (2k)

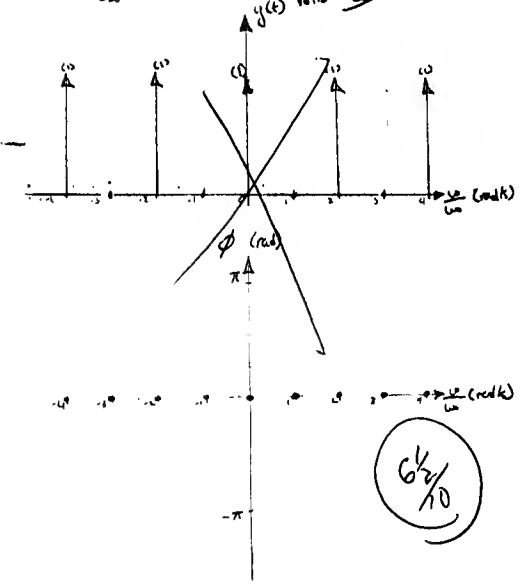

$\Delta f_1 = 4$ Hz

$\Delta f_2 = 2$ Hz

f scale not same on both graphs

impulse fundamental

$\frac{2}{1} = 2$ many $2\omega_0$!

6½/10

Name: [redacted]

2. Determine the Fourier series, trigonometric form, of the periodic function below. Simplify the coefficients as much as possible..

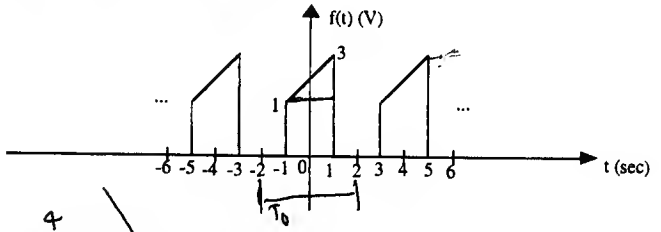

$T_0 = 4 \Rightarrow \omega_0 = \frac{2\pi}{T_0} = \frac{2\pi}{4} = \frac{\pi}{2}$ $\qquad f(t) = 2+t$

$a_0 = \frac{1}{T_0}\int_{T_0} f(t)\,dt = \frac{1}{2}\int_{-1}^{1}(2+t)\,dt = \frac{1}{2}\left(2t+\frac{t^2}{2}\right)\Big|_{-1}^{1} = \frac{1}{2}\left[\left(2+\frac{1}{2}\right)-\left(-2+\frac{1}{2}\right)\right] = \frac{1}{2}\left[\frac{5}{2}+\frac{3}{2}\right]$

$= \frac{1}{2}[4] = 2$ Volts This is obvious by inspection, nonetheless, a double check

$a_k = \frac{2}{T_0}\int_{T_0} f(t)\cos(k\omega_0 t)\,dt = \frac{2}{2}\int_{-1}^{1}(2+t)\cos(k\pi t)\,dt = 2\int_{-1}^{1}\cos(k\pi t)\,dt + \int_{-1}^{1} t\cos(k\pi t)\,dt$ (not this) (this = 0)

$= 2\left[\frac{\sin(k\pi t)}{k\pi}\right]\Big|_{-1}^{1} + \left[\frac{t}{k\pi}\sin(k\pi t) + \frac{1}{k^2\pi^2}\cos(k\pi t)\right]\Big|_{-1}^{1} = \frac{\cos(k\pi t)}{k^2\pi^2}\Big|_{-1}^{1}$

$= \frac{\cos(k\pi)}{k^2\pi^2} - \frac{\cos(-k\pi)}{k^2\pi^2} = 0$ This is expected, as this is an odd function shifted up by 2, but I wanted to double check!

$b_k = \frac{2}{T_0}\int_{T_0} f(t)\sin(k\omega_0 t)\,dt = \frac{2}{2}\int_{-1}^{1}(2+t)\sin(k\pi t)\,dt = 2\int_{-1}^{1}\sin(k\pi t)\,dt + \int_{-1}^{1} t\sin(k\pi t)\,dt$

$= 2\left[\frac{-\cos(k\pi t)}{k\pi}\right]\Big|_{-1}^{1} + \left[-\frac{t\cos(k\pi t)}{k\pi} + \frac{\sin(k\pi t)}{k^2\pi^2}\right]\Big|_{-1}^{1}$

$= 2\left[-\frac{\cos(k\pi)}{k\pi} + \frac{\cos(k\pi)}{k\pi}\right] + \left[\left(-\frac{\cos(k\pi)}{k\pi} + \frac{\sin(k\pi)}{k^2\pi^2}\right) - \left(+\frac{\cos(-k\pi)}{k\pi} + \frac{\sin(-k\pi)}{k^2\pi^2}\right)\right]$

$= 2\left[\frac{-\cos(k\pi)+\cos(k\pi)}{k\pi}\right] + \left[-\frac{\cos(k\pi)}{k\pi} - \frac{\cos(k\pi)}{k\pi}\right]$

$= -\frac{2\cos(k\pi)}{k\pi} = -\frac{2(-1)^k}{k\pi}$ Volts

8/10

$f(t) \approx a_0 + \sum_{k=1}^{\infty} a_k\cos(k\omega_0 t) + b_k\sin(k\omega_0 t) = 2 + \sum_{k=1}^{\infty} -\frac{2(-1)^k}{k\pi}\sin(k\pi t)$ Volts

Name: [redacted]

4. Given the amplitude density spectrum of f(t) shown below determine the spectrum of $g(t) = f(t)\cos(2\pi f_c t)$ and draw a neatly labelled graph of G(f)

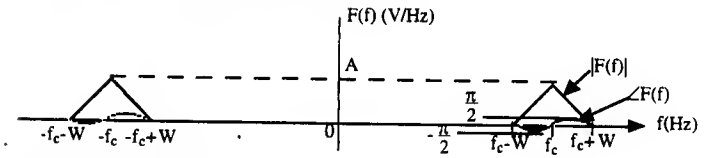

$g(t) = f(t)\cos(2\pi f_c t)$

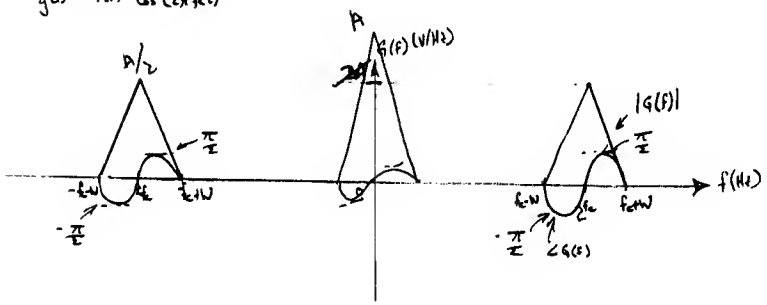

9/10

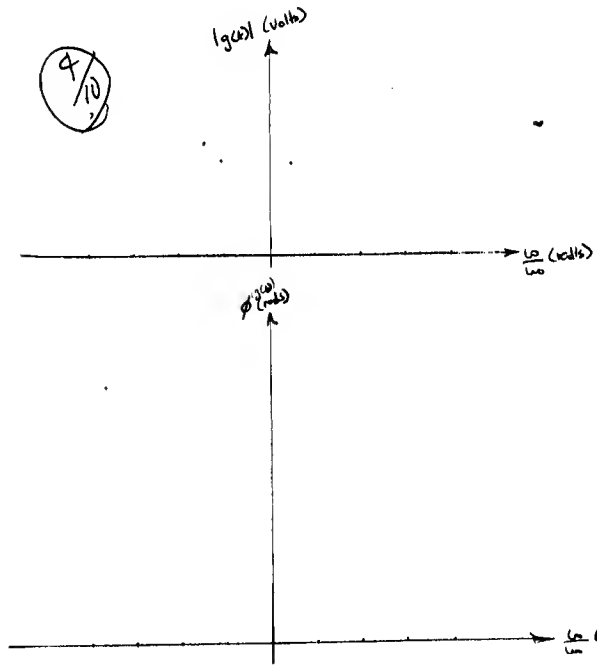

Fourier coefficients of $f_1(t)$

$$a_0 = \frac{2(2)}{4} = 1(v)$$

$$a_k = \frac{2}{T_0}\int_{T_0} f(t)\cos(k\omega_0 t)dt = \frac{2}{4}\int_{-1}^{1} 2\cos(k\omega_0 t)dt = 2\int_0^1 \cos(k\omega_0 t) = \frac{2\sin(k\omega_0 t)\Big|_0^1}{k\omega_0}$$

$$= \frac{2}{\pi k\omega_0}\sin(k\omega_0)$$

$$\left(\omega_0 = \frac{2\pi}{4} = \frac{\pi}{2}\right)$$

$$a_k = \begin{cases} \frac{4}{\pi k} & k = 1, 5, 9, \ldots \\ 0 & k = 2, 4, 6, \ldots \text{ (k even)} \\ -\frac{4}{\pi k} & k = 3, 7, 11, \ldots \end{cases}$$

Fourier coefficients of $f_2(t)$

$$b_k = \frac{2}{4}\int_{-1}^{1} t\sin(k\omega_0 t)dt = \underbrace{-\frac{\cos\left(k\frac{\pi}{2}\right)}{k\omega_0}}_{=0 \text{ k odd}} + \underbrace{\frac{\sin\left(k\frac{\pi}{2}\right)}{k^2\omega_0^2}}_{=0 \quad \text{k even}}$$

$$b_k = \begin{cases} \frac{1}{k\omega_0} & k = 2, 6, 10, \ldots \\ -\frac{1}{k\omega_0} & k = 4, 8, 12, \ldots \\ \frac{1}{k^2\omega_0^2} & k = 1, 5, 9, \ldots \\ -\frac{1}{k^2\omega_0^2} & k = 3, 7, 11, \ldots \end{cases}$$

$$f(t) = a_0 + \sum_{k=1}^{\infty}\left[a_k\cos(k\omega_0 t) + b_k\sin(k\omega_0 t)\right]$$ a_0, a_k, b_k, ω_0 as found above.

One could approach the problem directly by observing that in the interval $t \in [-1, 1]$, $f(t) = t + 2$

$a_k = \frac{2}{T_0}\int_{-1}^{1}(t+2)\cos(k\omega_0 t)dt = \frac{2}{T_0}\int_{-1}^{1} t\cos(k\omega_0 t)dt + \frac{2}{T_0}\int_{-1}^{1} 2\cos(k\omega_0 t)dt$. But the

351 -- TERM TEST --Solution

1. If the magnitude spectrum is even and the phase odd then the spectrum represents a real time function.

a) magnitude - even; phase - odd ⇒ real time function
b) magnitude - even; phase - even ⇒ complex time function
c) magnitude - even; though phase looks even this is a special case, since $\pi = -\pi$ phase is odd ⇒ real time function.
d) magnitude - even; phase - odd ⇒ real time function
e) here the spectrum is given in 'cartesian' form. However either argue that $|G(f)| = \sqrt{G_{real}^2(f) + G_{imag}^2(f)}$ is even and $\angle G(f) = \tan^{-1}\left(\frac{G_{imag}(f)}{G_{real}(f)}\right)$ is odd from the graphs of $G_{real}(f)$ and $G_{imag}(f)$

or note that $G(f) = \int_{-\infty}^{\infty} g(t)\,e^{-j2\pi ft}dt = \int_{-\infty}^{\infty} g(t)\cos(2\pi ft)\,dt - j\int_{-\infty}^{\infty} g(t)\sin(2\pi ft)\,dt$

$\Rightarrow G_{real}(f) = \int_{-\infty}^{\infty} g(t)\cos(2\pi ft)\,dt$ - an even function in f when g(t) is real.

$G_{imag}(f) = \int_{-\infty}^{\infty} g(t)\sin(2\pi ft)\,dt$ - an odd function in f when g(t) is real.

Therefore g(t) is real because $G_{real}(f)$ is even and $G_{imag}(f)$ is odd.

2. Express f(t) as a sum of two functions $f_1(t)$, $f_2(t)$ as shown below:

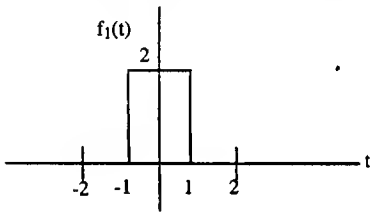

plus

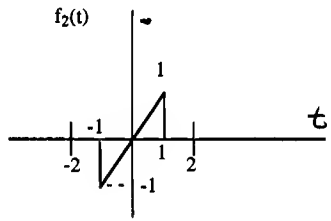

$f_1(t)$ is even ⇒ only a_k coefficients present
$f_2(t)$ is odd ⇒ only b_k coefficients present.

b) Spectrum of g(t) is the convolution of the two spectra, $F_1(f)$, $F_2(f)$,

$$\text{i.e., } G(f) = \int_{-\infty}^{\infty} F_1(\lambda)F_2(f-\lambda)d\lambda = \int_{-\infty}^{\infty} F_1(f-\lambda)F_2(\lambda)d\lambda$$

Doing the convolution graphically gives:

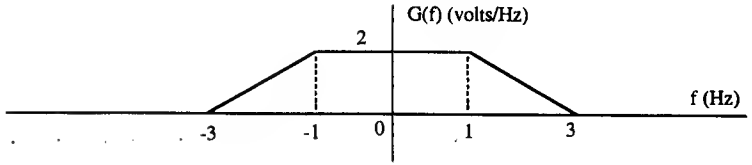

4. Multiplying f(t) by $\cos(2\pi f_c t)$ shifts the spectrum up by f_c, down by f_c, and divides it by 2.

Therefore $G(f) = \dfrac{F(f-f_c) + F(f+f_c)}{2}$.

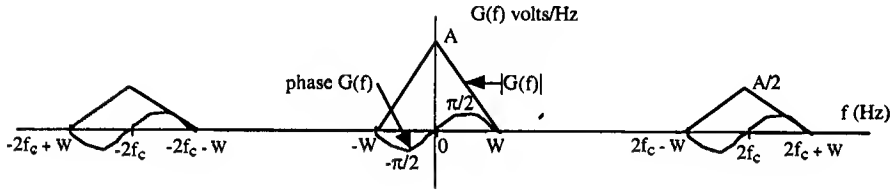

integrand in the 1st integral is odd, therefore the integral equals zero. So $a_k = \frac{2}{T_0}\int_{-1}^{1} 2\cos(k\omega_0 t)dt$ (as above). Similarly $b_k = \frac{2}{T_0}\int_{-1}^{1} t\sin(k\omega_0 t)dt + \frac{2}{T_0}\int_{-1}^{1} 2\sin(k\omega_0 t)dt$. Now the 2nd integral disappears and $b_k = \frac{2}{T_0}\int_{-1}^{1} t\sin(k\omega_0 t)dt$ (again as before).

(ALL ROADS LEAD TO ROME)

3. a) $f(t) = 2\cos(\pi t - 45^0) + 2\cos(3\pi t) + 2\cos(4\pi t - 60^0)$ (amps)

By inspection $\omega_0 = \pi$ rad/sec. Have 3rd and 4th harmonics.

$c_0 = 0$; $c_1 = 2$; $c_2 = 0$; $c_3 = 2$; $c_4 = 2$

$\phi_1 = -45^0$; $\phi_2 = 0^0$; $\phi_3 = 0^0$; $\phi_4 = -60^0$

$|d_k| = \frac{c_k}{2}$; $\angle d_k = \phi_k$

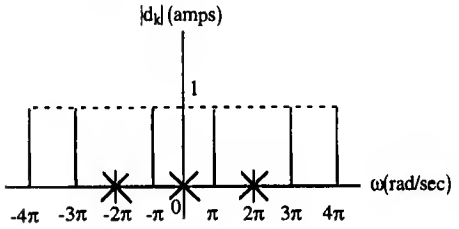

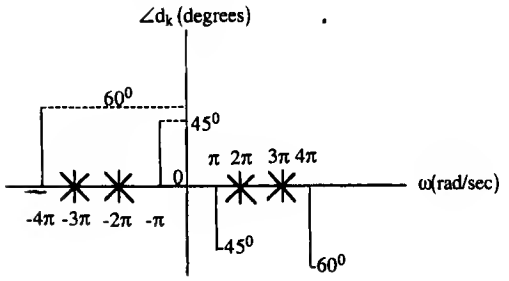

University of Saskatchewan, Electrical Engineering
EE 351.3 Spectrum Analysis and Discrete Time Systems
Midterm Examination
October 30, 2001

Note: 2 hour open-book exam.
Instructor: K. Takaya

1. (30) Two rectangular waves shown in Fig.1 are $f_{50\%}(t)$ and $f_{20\%}(t)$ defined respectively by

$$f_{50\%}(t) = \begin{cases} -1 & \text{if } -\pi \le t < -\frac{\pi}{2} \\ 1 & \text{if } -\frac{\pi}{2} \le t \le +\frac{\pi}{2} \\ -1 & \text{if } +\frac{\pi}{2} < t \le +\pi. \end{cases}$$

$$f_{20\%}(t) = \begin{cases} -1 & \text{if } -\pi \le t < -\frac{\pi}{5} \\ 1 & \text{if } -\frac{\pi}{5} \le t \le +\frac{\pi}{5} \\ -1 & \text{if } +\frac{\pi}{5} < t \le +\pi. \end{cases}$$

The two waveforms are similar but different only in their duty cycle (or on-time). Obtain only a_n (No need to find b_n) as both of the waveforms are symmetric. Then, compare the obtained a_n for 50% and that for 20% of the duty cylce, to find which waveform has greater high frequency components. Make your statements based on your calculated a_n.

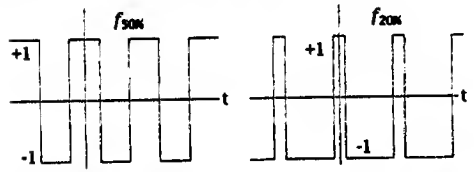

Fig. 1 Rectangular waveform of 50% duty cycle (left) and 20% (right).

2. (30) The distortion factor η indicates how much a given waveform is distorted from the sinusoidal wave of the same frequency. It is defined by using the exponential Fourier series D_n and D_{-n},

$$\eta = \frac{\text{Total Power} - |D_0|^2 - |D_1|^2 - |D_{-1}|^2}{|D_1|^2 + |D_{-1}|^2}$$

or by using the compact Fourier series C_n,

$$\eta = \frac{\text{Total Power} - |C_0|^2 - |C_1|^2}{|C_1|^2}.$$

Calculate the distortion factor η of the clipped sine wave, given by

$$f(t) = \begin{cases} \sin t & \text{if } 0 \le t < \frac{\pi}{3} \\ \sqrt{3}/2 & \text{if } \frac{\pi}{3} \le t \le \frac{4\pi}{3} \\ \sin t & \text{if } \frac{4\pi}{3} \le t \le \frac{5\pi}{3} \\ -\sqrt{3}/2 & \text{if } \frac{4\pi}{3} < t \le \frac{5\pi}{3} \\ \sin t & \text{if } \frac{5\pi}{3} \le t \le 2\pi. \end{cases}$$

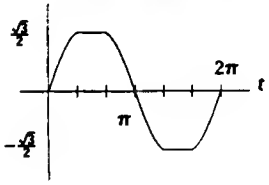

Fig. 2 Clipped sine wave.

3. (20) First, sketch the graph of

$$f(t) = \begin{cases} e^{-t} & \text{if } t \ge 0 \\ -e^{t} & \text{if } t < 0 \end{cases}$$

Then, obtain the Fourier transform of $f(t)$ defined by

$$F(\omega) = \int_{-\infty}^{\infty} f(t) e^{-j\omega t} dt$$

Then, sketch only the imaginary part of $F(\omega)$.

4. (20) Answer the following questions briefly in less than ten lines.
   1. What is the complex sinusoid represented by $e^{j\omega_0 t}$?
   2. Why do we use negative frequecies to represent the spectrum of a real signal such as $\cos \omega t$?
   3. What are the diferences between the Fourelr Series and the Fourier Transform?

— The E N D —

University of Saskatchewan, Electrical Engineering
EE 351.3 Spectrum Analysis and Discrete Time Systems
Final Examination, December 13, 2001

Note: 3 hour open-book exam. Marks for each question are as indicated.
Instructor: K. Takaya

1. (10) A rectangular function $r(t)$ is defined as

$$r(t) = \begin{cases} 1 & \text{if } -\frac{\tau}{2} < t < \frac{\tau}{2} \\ 0 & \text{othrwise} \end{cases}$$

Obtain the Fourier transform of $r(t-\tau)$ using the time-shifting property of the Fourier transform,

$$f(t-\tau) \Longleftrightarrow F(\omega)e^{-j\omega\tau}.$$

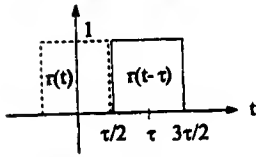

2. (10) The carrier suppressed AM (Amplitaude Modulation) of a periodic signal $f(t)$ having one cycle interval of T, i.e. $\omega_0 = \frac{2\pi}{T}$, modulated by a carrier frequency ω_c is given by

$$f_{AM}(t) = 2f(t)\cos\omega_c t.$$

Where, $\omega_c = \omega_0 \times M$ is much greater than ω_0. M is an integer.

1. Assuming that the exponential Fourier series of $f(t)$ are already calculated as D_n and D_{-n}, express the exponential Fourier series of $f_{AM}(t)$ in terms of D_n and D_{-n}.
2. Sketch the spectrum of $f_{AM}(t)$ assuming that the spectrum of $f(t)$, i.e. D_n and D_{-n}, is given as illustrated in the figure below.

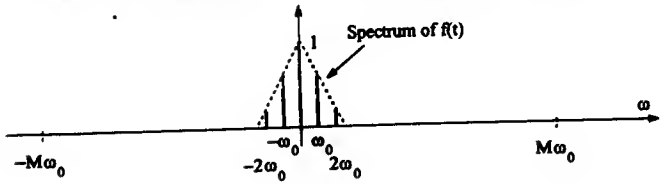

3. (15) Give brief explanations about "the sampling theorem" and "aliasing" (or spectrum folding) within 200 words.

4. (10) Find the z-transform of

$$0.5^{k+1}u[k-1] + 0.5^{k-1}u[k].$$

5. (10) Find the inverse z-transform of

$$\frac{2z^2 + 0.25}{(z+1)(z-0.5)^2}.$$

6. (10) Obtain the convolution sum between two functions $f[k]$ and $g[k]$,

$$c[k] = \sum_{m=0}^{k} f[m]g[k-m] = \sum_{m=0}^{k} g[m]f[k-m]$$

for $f[k] = (-1)^k u[k]$ and $g[k] = (0.2)^k u[k]$.

7. (15) Solve the following difference equation by using the z-Transform.

$$y[k] - 1.3y[k-1] + 0.4y[k-2] = f[k]$$

where, $f[k] = u[k-1]$, and $y[-1] = 1, y[-2] = 0$.

8. (10) Draw a diagram that illustrates the structure of a discrete transfer function given by

$$G[z] = \frac{1 - z^{-1}}{(1 - 0.5z^{-1})(1 - 0.8e^{+j\frac{\pi}{4}}z^{-1})(1 - 0.8e^{-j\frac{\pi}{4}}z^{-1})}.$$

Three delay elements, i.e. z^{-1}, connected in series must be used in the diagram.

9. (10) Obtain the amplitude and phase response of the system shown below.

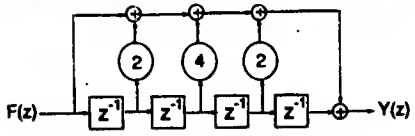

— The E N D —

EE315.3 Signals and Systems - Midterm Exam October 26, 2000

» Name

» Student Number

Problem 1.

1. Obtain the exponential Fourier series coefficients D_n and D_{-n} of a periodic function,

$$f(t) = 1 + \cos 2\pi t + \sin 4\pi t + \cos(6\pi t + \frac{\pi}{4}).$$

without performing the formal Foruier series integrations. Then sketch hoth real part and imaginary part of D_n in separate graphs.

2. Ohtain the standard Fourier series coefficients a_n and b_n of the same function $f(t)$. Then plot both of a_n and b_n in separate graphs.

Problem 2.

First, sketch the graph of

$$f(t) = \begin{cases} e^{-t} & \text{if } t \geq 0 \\ -e^{t} & \text{if } t < 0 \end{cases}$$

Then, obtain the Fourier transform of $f(t)$ defined by

$$F(\omega) = \int_{-\infty}^{\infty} f(t) e^{-j\omega t} dt$$

Then, sketch only the imaginary part of $F(\omega)$.

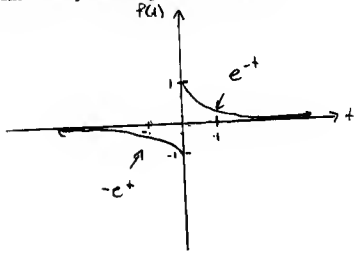

Problem 3.

The Fourier series of a sawtooth wave having one cycle period of $T = 2\pi$,

$$f(t) = \frac{t}{\pi} \quad \text{where, } -\pi < t \leq +\pi$$

is given by

$$D_0 = 0, \quad D_n = \frac{(-1)^{n-1}}{j2n} \quad \text{and} \quad D_{-n} = -\frac{(-1)^{n-1}}{j2n}$$

Calculate the distortion factor η of this sawtootb wave according to the definition,

$$\eta = \frac{\text{Total power} - \text{DC power} - |D_1|^2 - |D_{-1}|^2}{|D_1|^2 + |D_{-1}|^2}$$

Total Power $= \frac{1}{T}\int_T f(t)^2 dt$ DC power $= D_0^2 = 0$

$= \frac{1}{2\pi}\int_{-\pi}^{\pi} \frac{t^2}{\pi^2} dt$

$= \frac{1}{2\pi^3}\left(\frac{t^3}{3}\right)\Big|_{-\pi}^{\pi}$

$= \left(\frac{1}{2\pi^3}\right)\left(\frac{1}{3}\right)\left(\pi^3 - (-\pi)^3\right)$

$= \frac{1}{6\pi^3}\left(\pi^3 - (-\pi^3)\right)$

$= \frac{1}{6\pi^3}(2\pi^3)$

$= \frac{2\pi^3}{6\pi^3} = \frac{1}{3}$ ✓ . 6

$D_1 = \frac{1}{j2}$ $\quad D_{-1} = -\frac{1}{j2}$

$= \frac{1}{j2}$ $\quad = -\frac{1}{j2}$

$|D_1|^2 = \left|\frac{1}{-1(4)}\right|$ $\quad |D_{-1}|^2 = \left|\frac{1}{j2}\right|^2$

$= -\frac{1}{4}$ $\quad = \left(\frac{1}{j2}\right)^2$

$= -\frac{1}{4}$

$$\eta = \frac{\frac{1}{3} - 0 - \left(-\frac{1}{4}\right) - \left(-\frac{1}{4}\right)}{\left(-\frac{1}{4}\right) + \left(-\frac{1}{4}\right)}$$

$= \frac{\frac{1}{3} + \frac{1}{2}}{-\frac{1}{2}}$ power > 0 2

$= \frac{\frac{2}{6} + \frac{3}{6}}{-\frac{1}{2}} = \frac{\frac{5}{6}}{-\frac{1}{2}} = -\frac{10}{6} = -1.67$ (-3) -167%

$e^{3} = 2$

$-10^{7.5}$

University of Saskatchewan, Electrical Engineering
EE 315.3 Signals and Systems (I), Final Examination
December 21, 2000

Note: 3 hour open-book exam. All questions are of equal value.
Instructor: K. Takaya

1. A rectangular function $r(t)$ is defined as

$$r(t) = \begin{cases} 1 & \text{if } -\frac{\tau}{2} < t < \frac{\tau}{2} \\ 0 & \text{othrwise} \end{cases}$$

Obtain the Fourier transform of $r(t-\tau)$ using the time-shifting property of the Fourier transform,

$$f(t-\tau) \Longleftrightarrow F(\omega)e^{-j\omega\tau}.$$

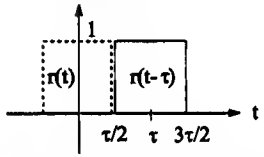

2. Determine the Nyquist sampling rate of a signal represented by its Fourier transform $F(\omega)$ as shown below. Where, $\omega_0 = 2\pi \times 1000$.

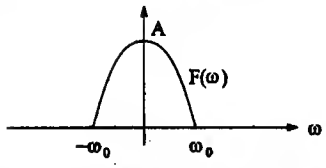

If the time signal $f(t)$ corresponding to $F(\omega)$ is sampled at a sampling rate exactly equal to the Nyquist sampling rate, what is the sampling frequency? how does this sampling affect the spectrum? Sketch the spectrum after sampling, to answer the question.

3. Find the zero input response of the difference equation,

$$y[k+2] - 0.25y[k] = f[k+2]$$

for a set of internal conditions $y[-2] = -4$ and $y[-1] = -6$. The z-transform is not allowed in this problem.

4. Find the z-transform of

$$0.5^{k+1}u[k-1] + 0.5^{k-1}u[k].$$

5. Find the inverse z-transform of

$$\frac{z(-5z+22)}{(z+1)(z-0.8)^2}.$$

6. Draw the block diagram of a discrete transfer function given by

$$G[z] = \frac{1 - z^{-1}}{(1 - 0.6z^{-1})(1 - 0.7z^{-1})(1 - 0.8z^{-1})}.$$

7. Obtain the convolution sum,

$$c[k] = \sum_{m=0}^{k} f[m]g[k-m]$$

for $f[k] = u[k]$ and $g[k] = (0.2)^k u[k]$.

8. Explain what "aliasing" (or spectrum folding) is briefly within 100 words.

— The E N D —

Department of Electrical Engineering
Midterm Examination EE 315.3

Time: 2 hours
Inst: H. Wood
Notes: Formula sheet allowed
Marks: As shown; Do all three questions.

October 1999

1. For the circuit shown in Figure 1,
   a) determine the differential equation that relates the current signal i(t) to the input voltage signal v(t). Show your work.
   b) For the values L=1H, R=5Ω, C= 1/6 F, what is the D operator form for the zero-input differential equation.
   c) Assuming i(t) has a solution of the form $i(t) = c\exp(-\lambda t)$, what is the characteristic zero-input solution if the current is zero at time t=0, and $di/dt = -2$ at $t = 0$?
   d) What is the unit impulse response h(t) of this system?

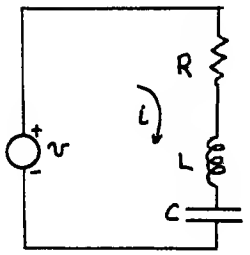

Figure 1.

2. When a unit impulse signal δ(t) is applied to a system A, the response of the system is

$$y(t) = 3\exp(-2t)\,u(t).$$

   a) Sketch this output signal giving care to the labelling of the axes.
   b) Sketch an input signal given by $x(t) = 2\,(u(t-1) - u(t-3))$
   c) Sketch the expected output of the system A when the input x(t) is applied.
   d) Calculate the output of the system when x(t) is input, using convolution.

3. Fourier hypothesized that a periodic waveform f(t) could be represented by an infinite sum of harmonically related components,

$$f(t) = a_o + \sum_{n=1}^{\infty}(a_n \cos n\omega_o t + b_n \sin n\omega_o t)$$

   a) Describe how the coefficients a_n and b_n can be determined, and give a mathematical expression for a_n and b_n following from your description.
   b) Show how the coefficients a_n and b_n can be evaluated for n= 0,1,2 if the waveform f(t) is as shown in Figure 2.
   c) Evaluate a_1 and b_1 for the waveform shown in Figure 2.

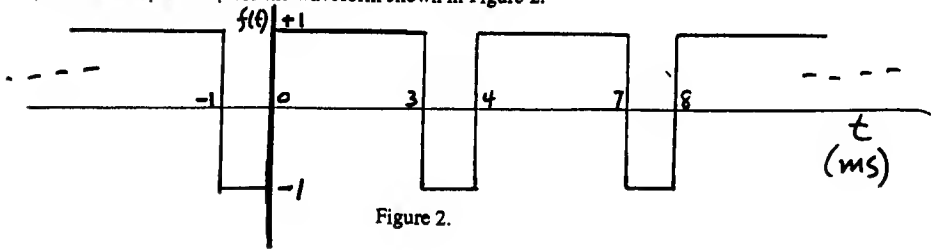

Figure 2.

University of Saskatchewan
Electrical Engineering EE 315.3 Final Examination

Time: 3 hours
Inst'r: H. Wood
Notes: Closed Book; a few pages of notes are allowed.
Marks: Do all 5 questions; marks as shown.

December 1999

1. A data communications engineer has the task of determining the on/off time ratio of the periodic signal shown in Figure 1, in order to meet certain specifications given by the customer. The customer wants to minimize the fraction of the AC signal power contained in the harmonic components beyond the fundamental frequency in order to minimize interference with other signals in the customer's system. The engineer, however, can only select values of x/T = 0.25, 1/3, 0.5, or 2/3, and has assumed that the signal power is proportional to $a_n^2 + b_n^2$, where a_n and b_n are the coefficients of the nth frequency component, and T is the period of the fundamental component. Also, the analysis was limited to n < 5.
   a) What value of x/T best satisfies the customer requirement? Show your reasoning and calculations.
   b) What is the DC signal component for each of the x/T values? Does this factor play a role in the efficiency of the communications system?
   c) If x/T could be any value, describe how you could determine the best possible value to meet the customer requirement, within the same assumptions given above. Note::You do NOT need to calculate the actual optimum value, but for a bonus, you may if you wish.

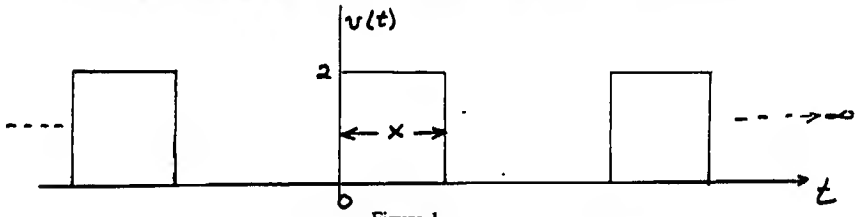

Figure 1.

2. An engineer has the task of designing a laser scanning system for reading the bar codes printed on many products in stores. Part of a typical bar code is shown in Figure 2a. The bar code is designed so that there is a unique pattern of wide and narrow strips, and spacings, so that any product can be identified from this coded pattern. The objective is to scan the bar code with a laser beam and detect the pattern from the reflected light.
Assume for this question that the strips are reflective and the spaces are not; the full width of the bar code is 3.0 cm.

   a) The engineer first decides to use a laser beam in the shape of a very small circular dot (<0.000001m diameter). Unfortunately, the amount of light reflected to the detector was therefore very low and a large integration time was needed in the detector to produce any significant output voltage. The measured impulse response of the detector was as shown in Figure 2b.

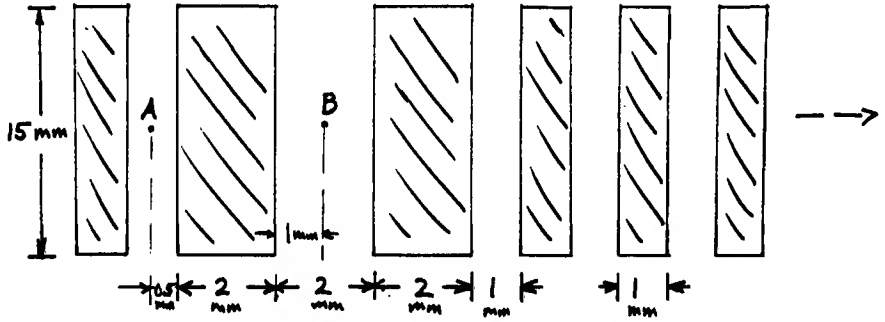

Figure 2 a.

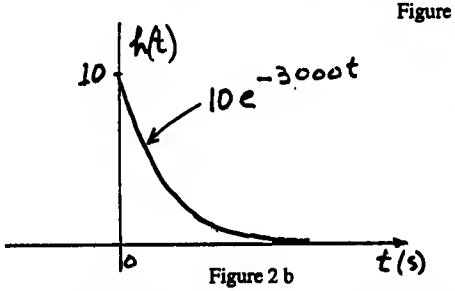

Figure 2 b

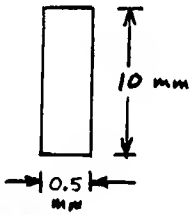

Figure 2 c.

2. a) i) Determine the output response of the detector as the laser dot moves from point A to point B in 1.0 ms in a straight line, at a uniform speed.

ii) If the detector output must fall by at least one-half of its maximum output during the narrowest spacing between strips in order to separate bars from spaces, what is the shortest time that the laser beam can take to scan the entire bar?

b) The engineer then decides to use a larger laser source, with a beam in the shape of a rectangle as shown in Figure 2c. Alignment of the beam and the bar code strips is then an issue, although the larger laser means that a much faster detector can be used. In fact, the detector's impulse response is now "infinitely narrow".

i) What is the detector output now as the rectangular beam shape scans from A to B when the rectangle shape of the beam and the strips are parallel?

ii) If the bar code becomes inclined by 15 degrees to the laser beam rectangle, what is the detector output as the beam scans from A to B?

iii) Are these two cases, b i) and b ii) true examples of convolution? Why or why not?

3. An engineer is designing a pulsed radar system to measure the distance to remote objects. The radar system transmits a pure sinusoidal RF signal at a frequency of 3.0 GHz (ie, 3.0×10^9 Hz) that is gated on and off to produce a finite duration pulse of RF energy. This pulse then travels through space to a stationary object and is reflected back to the radar antenna. The radar power output during transmission is 1.0 MW into a load of 100 Ohms.

a) If only the sinusoidal signal was being transmitted (continuously, without gating), what would the frequency spectrum be? Draw the time signal and plot the spectrum and calculate its amplitude and position.

b) When the sinusoidal signal is gated on and off once with a gate that is 1.0 microseconds long, what is the resulting spectrum? (Assume the full width of the gate is 1.0 microseconds with the gate centered on zero in the time plot) Draw the time signal and plot the spectrum carefully and accurately in the frequency domain, giving all necessary labels

c) If the engineer needs to design a receiver to measure the reflected signal, what should the center frequency of the receiver be and what should its bandwidth be to capture all of the reflected signal within the frequency region to the "first minimum" of the spectrum? (Hint—use only positive components of frequency for this calculation).

4. An engineer is trying to decide whether to use analog or digital electronic techniques to design a data communications system. Discuss the advantages and disadvantages of the digital method compared to the analog method.

5. The time limited signal shown in Figure 3a has a spectrum as shown in Figure 3b.

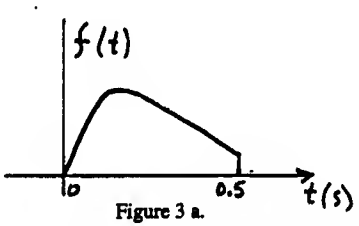

Figure 3 a.

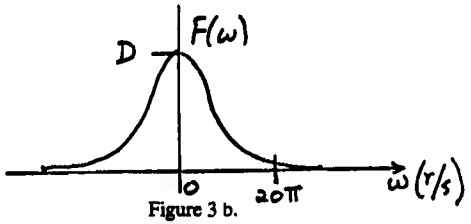

Figure 3 b.

a) Sketch the spectrum after the time signal has been sampled at a rate of 20 samples per second.

b) Will there be much overlap in the spectrum at the above sampling rate? What would happen to the overlap if the sampling rate was reduced to 10 samples per second? Why?

c) If the spectrum obtained in part a) above is itself sampled so that the spectral values can be stored in a digital computer, what is the effect on the time signal? Sketch the resulting time signal.

d) What is the frequency spacing in the sampled spectrum so that there is 50% padding between successive time signals? What is the maximum allowable spacing between frequency samples so there will be no overlap in time.?

e) How are the samples of the time signal and the samples of the frequency spectrum related to each other mathematically? Do not just give the equations, but explain what they mean in words.

f) How does the FFT derive from the relationship defined in e) ?

Check for units

University of Saskatchewan, Electrical Engineering
EE 315.3 Signals and Systems (I), Midterm Examination
October 27, 1998

Note: 2 hour open-book exam.
Instructor: K. Takaya

1. (20) A linear system is described by the differential equation,

$$(D^2 + 2D + 5)y(t) = (D + 4)f(t).$$

1. Write the characteristic equation, characteristic roots and characteristic modes of this system.
2. Obtain the zero-input response of this system for the initial conditions, $y(0) = 1$ and $\dot{y}(0) = 1$.
3. Find the unit impulse response of this system, i.e. find $y(t)$ for $f(t) = \delta(t)$.

2. (20) By using the convolution integral,

$$y(t) = \int_0^t f(t-\tau)g(\tau)d\tau = \int_0^t f(\tau)g(t-\tau)d\tau$$

obtain the convolution of the causal functions $g(t)$ and $f(t)$ shown in Fig. 1. Where,

$$f(t) = \begin{cases} 0 & \text{if } t < 0 \\ t & \text{if } 0 \le t < 1 \\ 1 & \text{if } 1 \le t \end{cases}$$

and

$$g(t) = e^{-t}u(t).$$

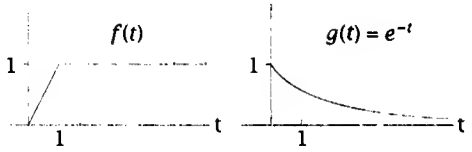

Fig. 1 Functions $f(t)$ and $f(t)$ for Question 2.

3. (20) Two rectangular waves shown in Fig.2 are $f_{50\%}(t)$ and $f_{20\%}(t)$ defined respectively by

$$f_{50\%}(t) = \begin{cases} -1 & \text{if } -\pi \le t < -\frac{\pi}{2} \\ 1 & \text{if } -\frac{\pi}{2} \le t \le +\frac{\pi}{2} \\ -1 & \text{if } +\frac{\pi}{2} < t \le +\pi. \end{cases}$$

$$f_{20\%}(t) = \begin{cases} -1 & \text{if } -\pi \le t < -\frac{\pi}{5} \\ 1 & \text{if } -\frac{\pi}{5} \le t \le +\frac{\pi}{5} \\ -1 & \text{if } +\frac{\pi}{5} < t \le +\pi. \end{cases}$$

The two waveforms are similar but different only in their duty cycle (or on-time). Obtain only a_n (No need to find b_n and a_0) by treating the waveforms as symmetric. Then, compare the obtained two a_n, one for 50% and the other for 20% of the duty cylce, to find which waveform has greater high frequency compoents. Write your answer with supporting reasons.

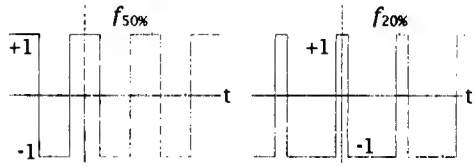

Fig. 2 Rectangular waveform of 50% duty cycle (left) and 20% (right).

4. (20) The distortion factor η indicates how much a given waveform is distorted from the sinusoidal wave of the same frequency. It is defined by using the exponential Fourier series D_n and D_{-n} as follows.

$$\eta = \frac{\text{Total Power} - |D_0|^2 - |D_1|^2 - |D_{-1}|^2}{|D_1|^2 + |D_{-1}|^2}$$

For the half sinusoidal wave shown in Fig. 3, obtain D_0, D_1 and the total power P, defined by

$$D_0 = \frac{1}{T}\int_T f(t)dt,\ D_1 = \frac{1}{T}\int_T f(t)e^{-j\omega_0 t}dt, \text{ and } P = \frac{1}{T}\int_T f(t)^2 dt.$$

Using the relationship $|D_1| = |D_{-1}|$, calculate the distortion factor η of the half sinusoidal wave.

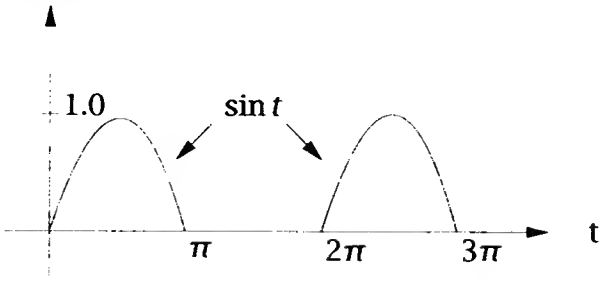

Fig. 3 Half sinusoidal wave.

5. (20) Answer the following questions briefly in two or three lines.

   1. What does $e^{j\omega_0 t}$ represent? (what is it?)
   2. Why do you need negative frequecies to represent a real signal such as $\cos \omega_0 t$ in the frequency domain?
   3. Determine the spectrum of $2 \cos 2\omega_0 t - \sin 2\omega_0 t$.

— The E N D —

University of Saskatchewan, Electrical Engineering
EE 315.3 Signals and Systems (I), Final Examination
December 16, 1998

Note: 3 hour open-book exam. All questions are of equal value.
Instructor: K. Takaya

1. Solve the following Fourier and Inverse Fourier problems.

   1. A rectangular function $r(t)$ is define as

   $$r(t) = \begin{cases} 1 & \text{if } -\frac{\tau}{2} < t < \frac{\tau}{2} \\ 0 & \text{othrwise} \end{cases}$$

   Obtain the Fourier transform of $r(t-\tau)$ and sketch the obtained Fourier transform in two separate graphs, (i) the magnitude versus ω and (ii) the phase versus ω.

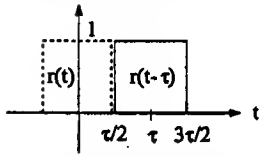

   2. By using the time-shifting property of the Fourier transform,

   $$f(t-\tau) \Longleftrightarrow F(\omega)e^{-j\omega\tau},$$

   obtain the inverse Fourier transform of $e^{-j\omega\tau}\tau \operatorname{sinc}\frac{\omega\tau}{2}$.

2. Determine the Nyquist sampling rate and the Nyquist sampling interval of a signal represented by its Fourier transform $F(\omega)$ as shown below.

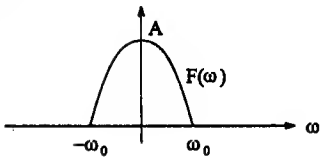

ω_0 corresponds to 1000Hz, i.e. $\omega_0 = 2\pi \times 1000$. Now, the time signal $f(t)$ corresponding to $F(\omega)$ is sampled at a sampling rate exactly equal to twice the Nyquist sampling rate. What are the sampling frequency f_s and the sampling time interval T? Plot the Fourier transform of the sampled signal $f(kT)$, where k is an integer sample number.

3. Find the zero input response of the difference equation,

$$y[k+2] - 0.25y[k] = f[k+2]$$

for a set of internal conditions $y[-2] = -4$ and $y[-1] = -6$. The z-transform is not allowed in this problem.

4. Find the z-transform of

$$2^{k+1}u[k-1] + 0.5^{k-1}u[k].$$

5. Find the inverse z-transform of

$$\frac{2z^3 - 4z^2 + 5z}{(z-1)(z^2 - 2z + 4)}.$$

6. Draw a canonical representation of the discrete transfer function given by

$$G[z] = \frac{1 - z^{-1}}{(1 - 0.6z^{-1})(1 - 0.7z^{-1})(1 - 0.8z^{-1})}.$$

Also, show the locations of poles and zeros involved in this transfer function $G[z]$ in the complex plane. (pole-zero configuration in the z-plane).

7. The spectrum of a periodic wave $f(t)$ having one cycle time interval of T can be expressed by the exponential (two sided) Fourier series coefficients,

$$D_n = \frac{1}{T}\int_T f(t)e^{-jn\omega_0 t}dt \quad \text{and} \quad D_n = D_{-n}^*$$

Where, $\omega_0 = \frac{2\pi}{T}$. Carrier suppressed AM (Amplitaude Modulation) is a simple multiplication process of the baseband signal

$$f(t) = \sum_n D_n^2 e^{jn\omega_0 t}$$

$f(t)$ and a carrier signal of frequency $\omega_c = \omega_0 \times M$. The carrier frequency ω_c is much greater than the fundamental frequency ω_0 of the baseband signal. The carrier suppressed AM is given by

$$f_{AM}(t) = 2f(t)\cos \omega_c t.$$

Express the exponential Fourier series of $f_{AM}(t)$ in terms of D_n and D_{-n} of the original signal $f(t)$. Then, sketch the spectrum of $f_{AM}(t)$ assuming that the spectrum of $f(t)$ is given as illustrated in the following figure.

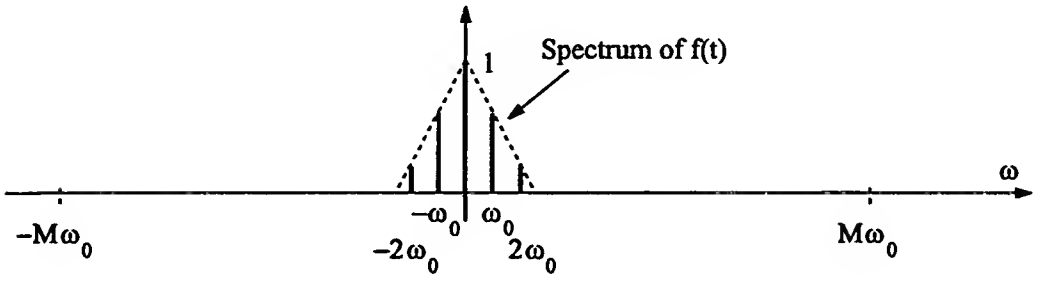

— The E N D —

October 25, 2002

University of Saskatchewan
Department of Electrical Engineering

EE372 Electronic Materials and Devices
Midterm Examination
Professor Robert E. Johanson

PART A

Name: [redacted]
Student Number: [redacted]

Welcome to the EE372 Midterm. The examination has two parts. Part A consists of questions that test knowledge of basic concepts, and part B requires more involved calculations. Part A is closed book and closed notes. When you finish part A, hand it in (raise your hand) and then proceed to part B. Part B is open book; you may refer to your textbook (Kasap, any edition) but not to any other material such as notes or other books. You may also use a calculator for both parts. The examination lasts 2 hours.

Each problem is weighted equally. Show your work if the question involves more than a simple answer; credit will be given only if the steps leading to the answer are **clearly** shown. Partial credit will be given for partially correct answers but only if correct intermediate steps are shown.

For part A, answer 4 of the 5 questions.

1. Photoelectric Effect

a) Circle any of the following that can be determined by a photoelectric experiment.

The ratio of charge to mass for the electron
The metal's work function ✓
The uncertainty in the position of the electron
The photon's energy → you set this - so it is already known
The value of Planck's constant ✓
The electron's DeBroglie wavelength

b) Sketch the apparatus and draw typical I-V curves for two different wavelengths of light and two different intensities. Indicate which is the longer wavelength and which is the greater intensity.

c) Explain what is surprising about the I-V curves from the viewpoint of classical (pre-quantum) theory.

b

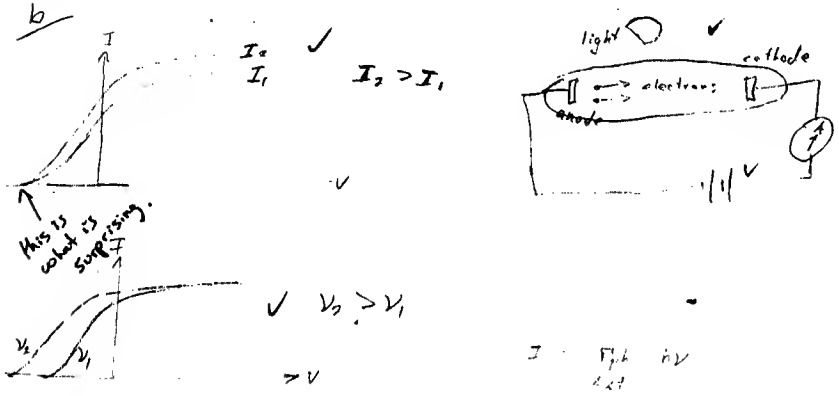

c

Surprising that the I-V curve changes for diff. wavelengths. According to classical theory, it should only depend on intensity X

That max kin. energy is independent of intensity

1.	6
2.	7
3.	—
4.	10
5.	9 1/2
total	32 1/2 / 40

3. Conduction in Semiconductors

a) Draw qualitatively the dependence of the drift mobility of a semiconductor on temperature and dopant concentration. Explain why the curves look the way they do.

b) Explain why a completely full band does not conduct electricity.

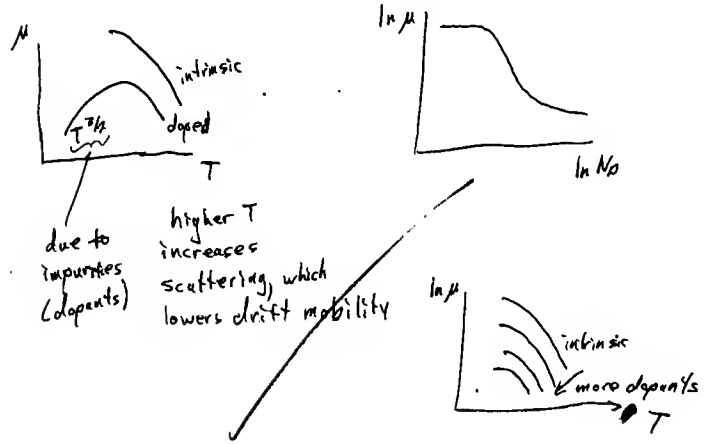

b

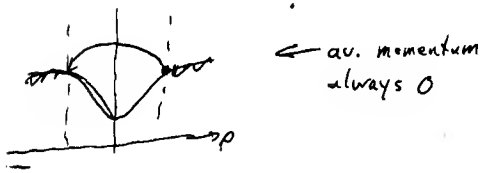

2. Semiconductor Band Structure

a) Draw a qualitative density of states diagram for compensated silicon. Label all relavent energy levels with appropriate symbols, and name the important regions of the density of states. Indicate approximately the position of the Fermi energy if the material is overall n-type.

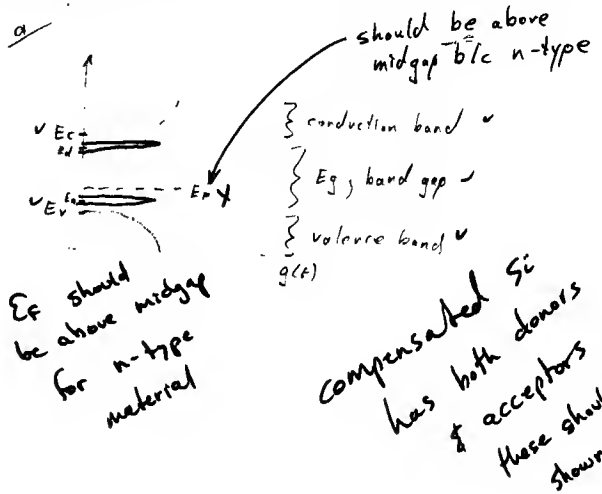

1

5. Lasers

a) Explain the difference between spontaneous and stimulated emission.

b) What condition is necessary for optical amplification and how is it achieved? Explain using a typical energy level diagram.

c) Why is the light from a laser nearly monochromatic? Provide one explanation for why the laser's output has a small spread in wavelength.

a

Spontaneous emission is caused by an electron decaying from a higher energy level E_2 ~~(usually metastable)~~ to a lower level E_1 ~~(usually the ground state)~~, releasing a photon in this process with ~~ΔE~~ $h\nu = E_2 - E_1$. In stimulated emission this state change occurs when a photon collides with the atom, causing this energy change and a photon emission.
two photons emitted.

b

"Population inversion"

Necessary condition: Inversion of states - more atoms at a higher energy level than at ground state ✓ ↳(note: e^-'s)
- achieved by "pumping" → using a light or electrical method to bump electrons up to metastable states:
ie:

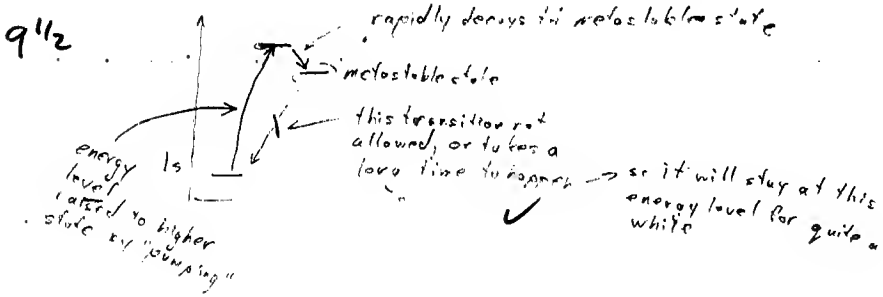

c

Light is monochromatic b/c of the quantized nature of the electron energy levels → when stimulated, the atom gives off the same amount of energy every time, in the form of a photon → Both elements in laser are chosen to produce only one transition ✓

Small spread in wavelength partially due to doppler effect. Atoms moving toward the receiver will emit a slightly higher freq +Δν due to their motion; atoms moving away will emit a slightly lower freq. -Δν → ✓

toward - blue shift
away - red shift

Also Heisenberg: atoms stay excited for a specific period of time, resulting in an uncertainty in energy

4. Coulomb Potential

a) What are the allowed values for each of the quantum numbers n, l, m_l, m_s?

b) How many electrons can occupy each of following subshells: 2s, 3p, and 4d?

c) What would happen to an atom if the Pauli Exclusion Principle did not hold?

d) Circle which level of the following pairs has the higher energy.

(3p) or 3s ✓
2p or (4p) ✓

10

a) $n = 1, 2, 3, \ldots$ ✓
$l = 0, 1, 2, \ldots (n-1)$ ✓
$m_l = 0, \pm 1, \pm 2, \ldots \pm l$ ✓
$m_s = \pm 1/2$ ✓

b) 2s: 2 ✓
3p: 6 ✓
4d: 10 ✓

c) There could be many electrons w/ exactly the same set of quantum numbers → Since they would all try to be at the lowest energy state, you would only have one shell + one subshell for every atom.
↳ No valence e^-'s, so no bonding? true.
↳ If Hund's rule still applied, they would all be the same spin → Very magnetic

October 25, 2002

University of Saskatchewan
Department of Electrical Engineering

EE372 Electronic Materials and Devices
Midterm Examination
Professor Robert E. Johanson

PART B

Name: [redacted]

Student Number: [redacted]

Welcome to the EE372 Midterm. The examination has two parts. Part A consists of questions that test knowledge of basic concepts, and part B requires more involved calculations. Part A is closed book and closed notes. When you finish part A, hand it in (raise your hand) and then proceed to part B. Part B is open book; you may refer to your textbook (Kasap, any edition) but not to any other material such as notes or other books. You may also use a calculator for both parts. The examination lasts 2 hours.

Each problem is weighted equally. Show your work if the question involves more than a simple answer; credit will be given only if the steps leading to the answer are **clearly** shown. Partial credit will be given for partially correct answers but only if correct intermediate steps are shown.

For part B, answer 3 of the 4 questions.

1. 10
2. 8
3. —
4. 10

total 28 / 30

PHYSICAL CONSTANTS

$c = 2.9979\times10^{8}$ m s^{-1}
$e = 1.6021\times10^{-19}$ C
$m_e = 9.1091\times10^{-31}$ kg
$h = 6.62608\times10^{-34}$ J s
$k = 1.3807\times10^{-23}$ J K^{-1}
$\varepsilon_o = 8.8542\times10^{-12}$ F m^{-1}

1. Semiconductor Statistics

a) A silicon crystal is uniformly doped with 3×10^{17} cm^{-3} of donors. Calculate the position of the Fermi level with respect to the conduction band edge E_C at T = 300 K.

b) The above silicon crystal is damaged by radiation. The damage causes new electron energy levels to appear at the center of the band gap with a density of 2×10^{17} cm^{-3} (each new level can contain only one electron). What is the density of electrons in the conduction band now? Calculate the new position of the Fermi level with respect to the conduction band edge E_C.

$T = 300$ K

$n = N_d = 3\times10^{17}\,cm^{-3} >> n_i$

$n = N_c e^{\left[-\frac{(E_c - E_{Fn})}{kT}\right]} = N_d$

$N_c = 2\left[\frac{2\pi m_e^* kT}{h^2}\right]^{3/2}$ For Si @ 300 K, $m_e^* = 1.08\,m_e$

$= 2\left[\frac{2\pi(1.08\times9.1\times10^{-31}kg)(1.38\times10^{-23}JK^{-1})(300K)}{(6.626\times10^{-34}J\cdot s)^2}\right]^{3/2}$

$N_c = 2.8\times10^{25}\,m^{-3} = 2.8\times10^{19}\,cm^{-3}$

10 $(E_c - E_{Fn}) = -kT\ln\left(\frac{N_d}{N_c}\right)$

$= (1.38\times10^{-23}JK^{-1})(300K)\ln(\quad)$

$E_c - E_{Fn} = -1.88\times10^{-20}\,J = \boxed{-.117eV = E_c - E_{Fn}}$ ✓

b

$N_c = 2.8\times10^{19}\,cm^{-3} - 2\times10^{17}\,cm^{-3}$ $\mu_e = \frac{e\tau_e}{m_e}$

$N_c = 2.8\times10^{25}$

$N_c = (2.8\times10^{19} - 2\times10^{17})\,cm^{-3} = 2.78\times10^{19} = N_c$

eg. doping atom is bonded to one Si atom:

$(E_c - E_{Fn}) = (1.38\times10^{-23}JK^{-1})(300K)\ln\left(\frac{3\times10^{17} - 2\times10^{17}\,cm^{-3}}{2.8\times10^{19}\,cm^{-3}}\right)$

$E_c - E_{Fn} = -2.33\times10^{-20}\,J = -.146eV = E_c - E_{Fn}$ ✓

$3\times10^{17}\,cm^{-3}$ donors

$2\times10^{17}\,cm^{-3}$ places for these donors to fall in

↳ results in $1\times10^{17}\,cm^{-3}$ in conduction band

$E = h\nu = \frac{hc}{\lambda}$ $p = \frac{h}{\lambda}$ $v = \frac{\lambda}{c}$

3. Quantum Tunneling

An insulator in an electronic device presents a potential barrier that is 10 eV high. If the electrons have an energy of 5 eV, how thick must the insulator be so that the probability of tunneling through the barrier is 0.05?

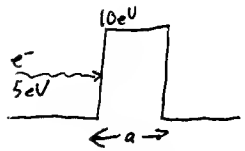

$T = 0.05 = T_0 e^{-2\alpha a}$ ← sub. in

$\alpha = [$ ← formula fr. text

$T_0 = \frac{16E(V_0 - E)}{V_0^2}$ ← formula fr. text

2. Hydrogen Atom

a) An electron with energy 12.5 eV collides with a hydrogen atom. What is the highest energy level that the atom's electron can be raised to by the collision.

b) Calculate all possible wavelengths of light that can be emitted by the above excited hydrogen atom as it returns to the ground state.

$E = \frac{-Z^2(13.6eV)}{n^2}$ For hydrogen, $Z = 1$

a

$-13.6eV + 12.5eV = \frac{-(1)^2(13.6eV)}{n^2}$

$n = 3.5 \rightarrow n = 3$ since n is an integer ✓

b

$E_3 = \frac{-(1)^2(13.6eV)}{(3)^2} = -1.51eV$

$\Delta l = \pm 1$ for photon emission

can also be excited to 3p or 3d levels.

2 transitions to get to ground state: ① and ②

In decaying from $3s \rightarrow 2p$:

$E_2 = \frac{-(1)^2(13.6eV)}{(2)^2} = -3.4eV$

$E = \frac{hc}{\lambda}$ $\lambda_① = \frac{hc}{(E_3 - E_2)} = \frac{(4.135 \times 10^{-15} eV \cdot s)(3 \times 10^8 m/s)}{(-1.51 - -3.4\,eV)}$

$\lambda_① = 656.3\,nm$ ✓

In decaying from $2p \rightarrow 1s$:

$\lambda_② = \frac{hc}{(E_2 - E_1)} = \frac{(4.135 \times 10^{-15} eV \cdot s)(3 \times 10^8 m/s)}{(-3.4eV - -13.6eV)}$

$\lambda_② = 121.6\,nm$ ✓

4. Photons and Photoelectrons

Light with intensity 10 mW/cm^2 and wavelength 430 nm illuminates a piece of metal with area 5 cm^2 in a photoelectric experiment. The metal's work function is 1.7 eV.

a) Calculate the energy of a photon and the photon flux.

b) Calculate the current of photoelectrons collected when a large positive bias is applied to the collecting electrode in the photoelectric experiment.

c) What is the maximum velocity with which a photoelectron leaves the metal.

d) How much negative voltage needs to be applied to the collecting electrode to eliminate the photocurrent.

$I = 10\ mW/cm^2 \quad \lambda = 430\ nm$

$A = 5\ cm^2$

$\Phi = 1.7\ eV$

a)

$KE = h\nu = \frac{hc}{\lambda} = \frac{(4.135\times10^{-15}\ eV\cdot s)(3\times10^8\ m/s)}{(430\times10^{-9}\ m)}$

$KE_{ph} = 2.88\ eV = 4.622\times10^{-19}\ J$ ✓

$I = \Gamma_{ph}\, h\nu$

$\Gamma_{ph} = \frac{I}{h\nu} = \frac{10\ mW/cm^2}{(4.622\times10^{-19}\ J)} = 2.16\times10^{16}\ photons\ cm^{-2}s^{-1}$ ✓

10

b)

$KE_m = h\nu - h\nu_0$

$\Phi = h\nu_0 \rightarrow \nu_0 = \frac{1.7\ eV}{4.135\times10^{-15}\ eV\cdot s} \qquad \nu_0 = 4.11\times10^{14}\ s^{-1}$

$KE_m = 2.88\ eV - 1.7\ eV = 1.18\ eV$ ← KE of e⁻ leaving

If each photon striking the electrode results in one electron being emitted:

$I = 2.16\times10^{16}\ cm^{-2}s^{-1} \cdot 5\ cm^2 \cdot (1.60218\times10^{-19}\ C)$ (charge of e⁻)

$I = 17.3\ C/s = 17.3\ mA$ ✓

c)

$1.18\ eV \cdot (1.6022\times10^{-19}\ J/eV) = \frac{1}{2} m_e v^2$ $\quad m_e = 9.10939\times10^{-31}\ kg$

$v = 644.3\ km/s$ ✓

d) To extinguish the photocurrent,

$eV_0 = KE_m$

$V_0 = \frac{1.18\ eV - 1.6022\times10^{-19}\ J/eV}{1.60218\times10^{-19}\ C}$

$V_0 = -1.18\ V$ ✓

COLLEGE OF ENGINEERING

ELECTRICAL ENGINEERING EE372.3

Midterm Examination
Part A (Closed Book)

October 26, 2001

Instructor: S.O. Kasap
Time allowed: Part A is 1 hour.

Note: Closed book examination. No calculators are allowed for this part. *Answer any 2 questions from 4 questions.* All questions carry equal marks. Marks for part-questions are shown in [ ] in the left hand margin. All answers must be given in conventional units. All sketches must be clearly labeled and self-explanatory. Diagrams that are not properly and clearly labeled and are subject to ambiguity will be heavily penalized. State clearly all assumptions made in your derivations. Unless otherwise stated all % are in weight % (%). Write your answers in this question book. You can use both sides of the paper for your answers.

Note: You must hand in this exam question book (Part A) before you can start on Part B.

1. Consider the photoelectric experiment.

[3] (a) Sketch the current-voltage characteristics for both negative and positive anode voltages when the photocathode is

(i) Illuminated with the same frequency but different intensity light,

(ii) Illuminated with the same intensity but different frequency light.

[3] (b) How is the maximum kinetic energy of the photo-emitted electrons determined? Sketch the dependence of the maximum kinetic energy of the photoemitted electrons on the frequency of light for different cathode materials. How does the maximum kinetic energy depend on the intensity of light ?

[3] (c) What is the intensity of light? What is the conclusion from this experiment ?

25

a) (i)

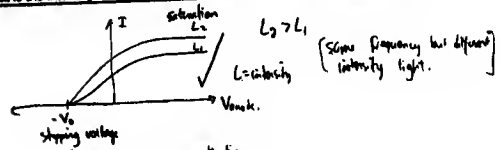

[same frequency but different intensity light.]

(ii)

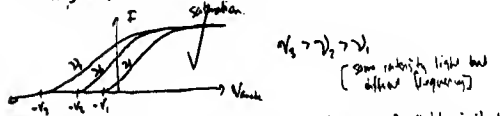

$\nu_3 > \nu_2 > \nu_1$

[same intensity light but different frequency]

b) Maximum kinetic energy (KE_m) is determined by the frequency of light incident on the photocathode, and the work function of the metal. $KE_m = h\nu - \Phi$. where Φ = work function of the metal. which is the amount of energy required to eject an electron out of the metal.

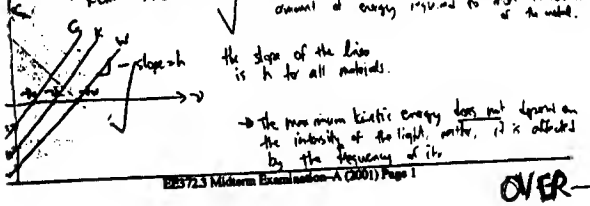

the slope of the line is h for all materials.

→ the maximum kinetic energy does not depend on the intensity of the light, rather, it is affected by the frequency of it.

OVER →

(c) The intensity of the light is the number of photons at some frequency, ν, that pass through a unit area per unit time. It can be described as below:

$$L \propto \frac{\Delta N_{ph} \cdot \nu}{A \Delta t}$$

$$L = \underbrace{h\nu}_{\text{photon energy}} \cdot \underbrace{\frac{\Delta N_{ph}}{A \Delta t}}_{\text{photon flux}}$$

Conclusions from this experiment:

1) $I_{saturation} \propto L$
2) KE_m is not affected by the intensity
3) KE_m is affected by the frequency.
4) Φ (work function) is a property of the metal.

Light = Photons

Your Last Name First Name Student Number

[7] **2.** (a) Explain briefly the *significance* of the quantum numbers n, ℓ, m_ℓ, m_s. What are the allowed values of n, ℓ, m_ℓ, m_s? Show the ordering of the energy levels for an electron in a many-electron atom from n = 1 to n = 4 level (including n = 4).
Note: 4s is above 3p and below 3d; but 4p is above 3d.

[4] (b) State the Pauli Exclusion Principle and Hund's rule.

[14] (c) Draw the energy diagrams for the electronic structure of
(i) atomic silicon (atomic number 14) and
(ii) atomic nitrogen (atomic number 7).
Ensure that your diagrams are clear and that each electron can be assigned its quantum numbers appropriately.
[Note: You can use a box to represent an orbital wavefunction, ψ_{n,ℓ,m_ℓ}. Relative energies of the boxes must, however, be shown]

Your Last Name First Name Student N—

[9] **3.** (a) Sketch the energy band diagram of a metal and identify the various significant features in your diagram.

[8] (b) Sketch the energy band diagram of a metal when a voltage difference is applied across it. How does conduction occur? Why are metals conductors.

[8] (c) Sketch the energy band diagram of a semiconductor and identify the various significant features in your diagram. Why are semiconductors insulators at low temperatures? What would happen if a photon of energy $h\nu > E_g$ is incident on this semiconductor?

Your Last Name First Name Student Number

[25] 4. Explain with clear diagrams the basic principle of operation of the Er^{3+} ion doped fiber amplifier. Sketch schematically how this may be used in optical communications.

The Er^{3+} ion doped fiber amplifier works on the principle of stimulated emission. for stimulated emission to occur, population inversion has to be present. Population inversion is when there are more electrons at an energy level that is above ground state, than there is at the ground state. Population inversion is achieved by using a pumping mechanism. In the case of the EDFA, a laser diode emitting photons ($\lambda = 980$ nm) acts as the pumping mechanism. The optical $\lambda = 980$nm photons excite the electrons at the ground state, causing them to move up to the third energy level ($E_3 = 1.3$ eV), The they quickly decay with a radiationless transition to E_2 (0.8 eV). This is where the stimulated emission takes place. A photon of wavelength = 1550 nm containing the same energy as the electron on E_2 ($E_2 - E_1 = 0.8$eV), and influences the electron to return to the ground state ($E_1 = 0$ eV). when it decays, it releases a photon that is in phase with the wavelength = 1550nm photon that caused its decay.

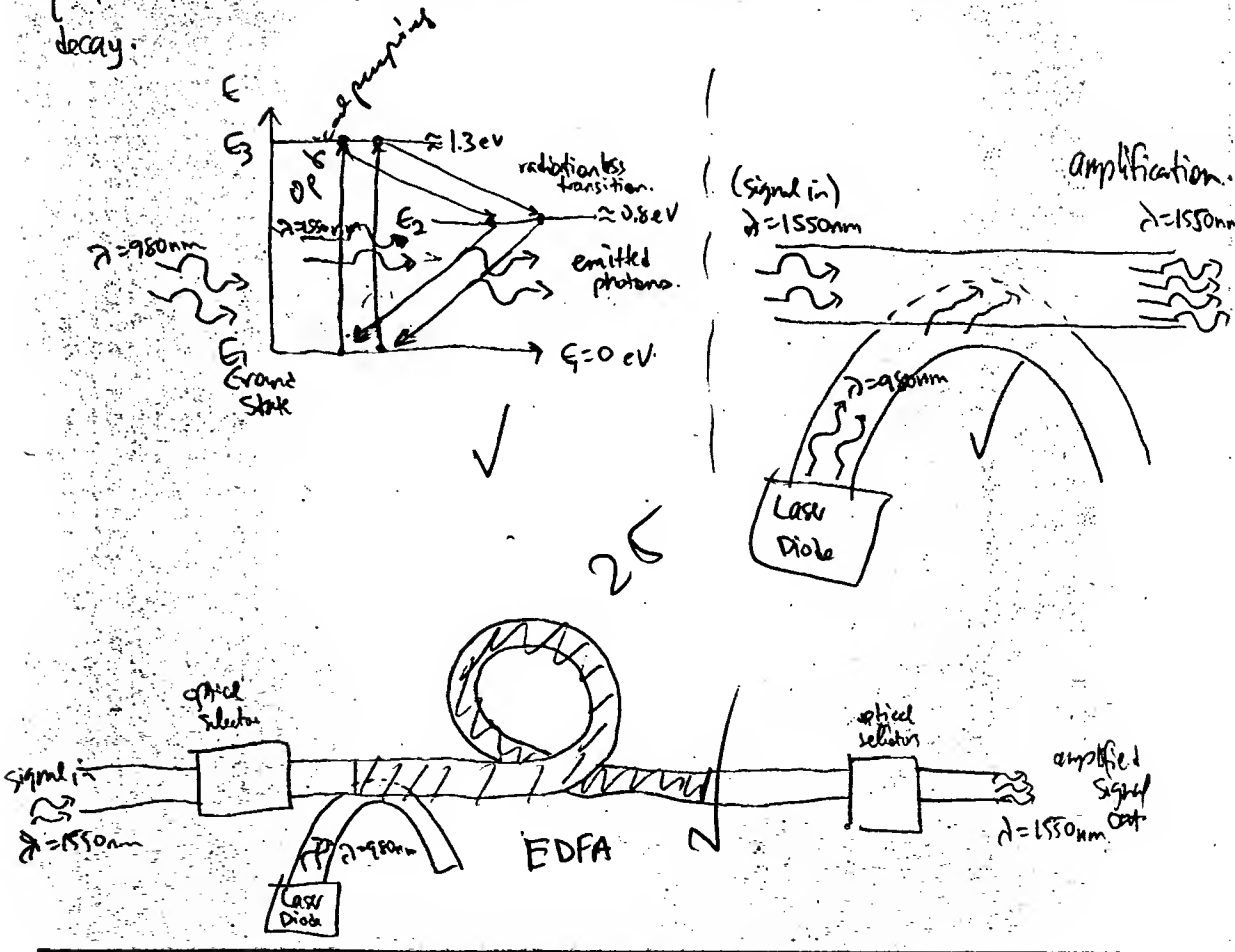

UNIVERSITY OF SASKATCHEWAN
COLLEGE OF ENGINEERING

ELECTRICAL ENGINEERING EE372.3

Midterm Examination
Part B (Open Book)

Instructor: S.O. Kasap — October 26, 2001
Time allowed: Part B is 1 hour

Note: Open book examination. Calculators are allowed. *Answer any 2 questions from 3 questions.* All questions carry equal marks. Marks for part-questions are shown in [ ] in the left hand margin. All answers must be given in conventional units. State clearly all assumptions made in your derivations. Method of solution must be clearly shown. Numerical mistakes, incorrect, unconventional or missing units will be heavily penalized. Mention the source of materials data used.

Important: *You must hand in Part A before you can start Part B.* Write your answers in the university answer book.

[12] **1.** **a** A multialkali metal (e.g. Sb-K-Na/Cs) metal is to be used as the photocathode material in a photoemissive electron tube. It is found that the longest wavelength radiation that gives photoemission is 420 nm. If violet radiation of wavelength 390 nm is incident on to this photocathode, what will be the kinetic energy of the photoemitted electrons in electron volts? What is the effective work function of this photocathode materia? What should be the voltage required on the opposite electrode to extinguish the external photocurrent ?

b Suppose that the violet light of wavelength 390 nm has an intensity of 50 mW cm^{-2}. Suppose that the photocathode is a disk of diameter 4 mm. If the emitted electrons are collected by applying a positive bias of 50 V to the anode, what will be the photoelectric current assuming that the quantum efficiency (η) is 20%. What is the photocurrent when the anode voltage is doubled to 100 V?

Note: Quantum efficiency is defined by
Quantum efficiency = (Number of electrons emitted)/(Number of photons absorbed)

---

[9] **2.** **a** A projectile electron with a velocity 2,000 km s^{-1} collides with a hydrogen atom in a gas discharge tube. Find to which *n*-th energy level the electron in the hydrogen atom gets excited to and the Bohr radius of the excited electron.

[7] **b** Calculate the possible wavelengths of radiation (in Å) that will be emitted from the excited H-atom in the above example as the electron returns to its ground state.

*[*Reminder: $1\text{Å} = 10^{-10}m$*]*

[9] **c** In a gas discharge tube, He^{+} ions are to be further ionized to He^{++} via impact ionization with electrons accelerated by an applied voltage. Calculate the minimum theoretical voltage required to achieve the ionization.

---

3. A particular He-Ne laser operating at 632.8 nm has a tube that is 50 cm long. The operating temperature is 117 °C

[6] **a** Estimate the Doppler broadened linewidth ($\Delta\lambda$) in the output spectrum.

[5] **b** What are the mode number m values that satisfy the resonant cavity condition? How many modes are therefore allowed?

[7] **c** What is the separation $\Delta\upsilon_m$ in the frequencies of the modes? What is the mode separation $\Delta\lambda_m$ in wavelength.

[7] **d** Show that if during operation, the temperature changes the length of the cavity by δL, the wavelength of a given mode changes by $\delta\lambda_m$,

$$\delta\lambda_m = \frac{\lambda_m}{L}\delta L$$

Given that typically a glass has a linear expansion coefficient $\alpha = 10^{-6}\ K^{-1}$, calculate the change $\delta\lambda_m$ in the output wavelength (due to one particular mode) as the tube warms up from 20 °C to 117 °C, and also per degree change in the operating temperature. Note that $\delta L/L = \alpha\delta T$, and $L' = L[1 + \alpha(T' - T)]$. Change in mode wavelength $\delta\lambda_m$ with the change δL in the cavity length L is called *mode sweeping.*

PHYSICAL CONSTANTS AND USEFUL INFORMATION

$c = 2.9979 \times 10^{8}\ m\ s^{-1}$
$e = 1.6021 \times 10^{-19}\ C$
$m_e = 9.1091 \times 10^{-31}\ kg$
$h = 6.62608 \times 10^{-34}\ J\ s$
$\hbar = h/(2\pi) = 1.05459 \times 10^{-31}\ J\ s$
$N_A = 6.0221 \times 10^{23}\ mol^{-1}$
$k = 1.3807 \times 10^{-23}\ J\ K^{-1}$
$\varepsilon_o = 8.8542 \times 10^{-12}\ F\ m^{-1}$
$\mu_o = 4\pi \times 10^{-7}\ H\ m^{-1}$

Gas constant, $R = N_A k = 8.3144\ J\ K^{-1}\ mol^{-1} = 0.083144\ L.bar\ K^{-1}\ mol^{-1}$
Mass of proton = 1.67495×10^{-27} kg
Mass of hydrogen atom = 1.6736×10^{-27} kg
Acceleration due to gravity (at 45° latitude), $g = 9.81\ m\ s^{-2}$

UNITS

SI UNITS		
Length	meter	m
Mass	kilogram	kg
Time	second	s
Electric current	ampere	A
Temperature	kelvin	K
DERIVED SI UNITS		
Electric charge	coulomb	$C = A\ s$
Electrical resistance	ohm	$\Omega = V/A = kg\ m^2\ A^{-2}\ s^{-3}$
Electrical conductance	siemen	$S = 1/\Omega$
Electrical capacitance	farad	$F = A\ s\ V^{-1} = A^2\ s^4\ kg^{-1}\ m^{-2}$
Electrical inductance	henry	$H = V\ s\ A^{-1} = kg\ m^2\ s^{-1}\ A^{-2}$
Energy	joule	$J = kg\ m^2\ s^{-2} = N\ m$
Force	newton	$N = kg\ m\ s^{-2}$
Magnetic flux	weber	$Wb = V\ s = kg\ m^2\ A^{-1}\ s^{-2}$
Magnetic flux density	tesla	$T = Wb\ m^{-2} = V\ s\ m^{-2} = kg\ A^{-1}\ s^{-2}$
Pressure	pascal	$Pa = N\ m^{-2}$
Power	watt	$W = J\ s^{-1} = kg\ m^2\ s^{-3}$
Electric potential difference	volt	$V = N\ m\ C^{-1} = kg\ m^2\ s^{-3}\ A^{-1}$
Frequency	hertz	$Hz = s^{-1}$

UNIVERSITY OF SASKATCHEWAN
COLLEGE OF ENGINEERING

ELECTRICAL ENGINEERING EE372.3

Final Examination
Part B

December 18, 2001

Instructor: S.O. Kasap
Time allowed: Part B is nominally 1½ hour.
Total time allowed: 3 hours for Parts A and B.

Instructions: Open book examination. Only the course textbook and one three-ring binder containing course notes and handouts are allowed. Calculators are allowed.

Answer any 3 questions from 4 questions. If you answer more than 3 questions, only the first three will be marked. All questions carry equal marks. Marks for a part–question depend on the difficulty of the question. All answers must be given in conventional units. State clearly all assumptions made in your derivations. Method of solution must be clearly shown. Numerical mistakes, incorrect, unconventional or missing units will be heavily penalized. Mention the source of materials data used.

Important: You must hand in Part A before you can start Part B. Write your answers in the university answer book.

Note: You may spend more or less time on Part B; but the total exam time is 3 hours.

---

[17] **1.** An *n*-type Si sample has been doped with 5×10^{15} phosphorus (P) atoms cm^{-3}. The donor energy level for P in Si is 0.045 eV below the conduction band edge energy, E_c.

a Calculate the room temperature conductivity of the sample.
b Where is the Fermi level with respect to the intrinsic sample?
c Determine the temperature above which the sample behaves as if intrinsic. Where is the Fermi level at this temperature?
d Determine the lowest temperature (°C) above which nearly all the donors are ionized. Where is the Fermi level at this temperature?
e What is the useful temperature range for a *pn* junction device such as a diode that uses this *n*-type semiconductor?
f Calculate the necessary minimum acceptor doping (*i.e.* N_a) that is required to make this sample *p*-type with approximately the same conductivity.

---

[17] **2.** Consider a long *pn* junction diode with an acceptor doping, N_a, of 10^{18} cm^{-3} on the *p*-side and donor concentration of N_d on the *n*-side. The diode is forward biased and has a voltage of 0.6 V across it. The diode cross-sectional area is 1 mm^2. The minority carrier recombination time, τ, depends on the dopant concentration, N_{dopant} (cm^{-3}), through the following approximate relation

$$\tau = \frac{5\times10^{-7}}{\left(1+2\times10^{-17}N_{dopant}\right)}$$

a Suppose that $N_d = 10^{15}$ cm^{-3}. Then the depletion layer extends essentially into the *n*-side and we have to consider minority carrier recombination time, τ_h, in this region. Calculate the diffusion and recombination contributions to the total diode current. What is your conclusion?
b Suppose that $N_d = N_a = 10^{18}$ cm^{-3}. Then W extends equally to both sides and, further, $\tau_e = \tau_h$. Calculate the diffusion and recombination contributions to the diode current. What is your conclusion?

---

[17] **3.** Consider an idealized *pnp* bipolar transistor with the properties listed below in the table. Assume that the base region has a relatively uniform doping. The emitter and collector donor concentrations are mean values. The cross sectional area is 0.0001 cm^2 (100 μm × 100 μm). The transistor is biased to operate in the normal active mode. The collector current is 1 mA. The base-collector voltage is 12V

Properties of an pnp bipolar transistor

Emitter width	Emitter doping	Electron lifetime in emitter	Base width	Base doping	Hole lifetime in base	Collector doping
10 μm	1×10^{18} cm^{-3}	10 ns	4 μm	5×10^{15} cm^{-3}	300 ns	5×10^{15} cm^{-3}

a Calculate the depletion layer width extending from the collector into the base and from the emitter into the base. What is the width, W_B, of the neutral base region?
b Calculate α and hence β for this transistor assuming that the emitter injection efficiency γ is unity. Comment on how these should depend on V_{CB}.
c What is the emitter injection efficiency γ?
d What are α and β taking into account the emitter injection efficiency?
e What are the emitter and base currents?
f What is the emitter-base voltage?
g Whar are r_{be} and C_{be} if this transistor were connected in the CE (common emitter) configuration with the same collector current and the same voltage across the BC junction?

NOTE: Assume that the emitter current is due to minority carrier diffusion and not recombination in the depletion region.

---

[17] **4.** Consider an *n*-channel JFET which has a pinch-off voltage (V_p) of 3 V an I_{DSS} = 30 mA. It is used in a common source configuration in which the gate to source bias voltage is V_{GG} and the battery voltage is V_{DD}.

a Suppose that a small signal voltage gain of -20 is needed and you have to keep $V_{DS} = {}^1/_2 V_{DD}$. Given that you only have V_{DD} = 30 V, what should be the bias gate-source voltage V_{GG}, the drain resistance R_D, and the drain current I_D?
b If an ac signal of 3V peak-to-peak is applied to the gate in series with the dc bias voltage, what will be the ac output voltage peak-to peak? What is the voltage gain for positive and negative input signals? Sketch the input and output signal waveforms and mark the various voltagve levels?
e What would be the input current and hence the input impedance of the JFET?

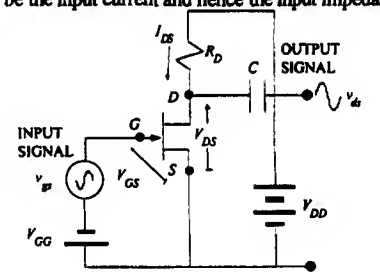

Your Last Name First Name Student Number

50/50 50K

UNIVERSITY OF SASKATCHEWAN
COLLEGE OF ENGINEERING

ELECTRICAL ENGINEERING EE317.3

Midterm Examination
Part A (Closed Book)

Instructor: S.O. Kasap October 24, 2000
Time allowed: Part A is 1 hour.

Note: Closed book examination. No calculators are allowed for this part. *Answer any 2 questions from 4 questions.* All questions carry equal marks. Marks for part–questions are shown in [ ] in the left hand margin. All answers must be given in conventional units. All sketches must be clearly labeled and self-explanatory. Diagrams that are not properly and clearly labeled and are subject to ambiguity will be heavily penalized. State clearly all assumptions made in your derivations. Unless otherwise stated all % are in weight % (%). Write your answers in this question book. You can use both sides of the paper for your answers.

Note: You must hand in this exam question book (Part A) before you can start on Part B.

1. Consider the photoelectric experiment.
[10] (a) Sketch the current-voltage characteristics for both negative and positive anode voltages when the photocathode is
(i) illuminated with the same frequency but different intensity light,
(ii) illuminated with the same intensity but different frequency light.
[10] (b) How is the maximum kinetic energy of the photo-emitted electrons determined? Sketch the dependence of the maximum kinetic energy of the photoemitted electrons on the frequency of light for different cathode materials. How does the maximum kinetic energy depend on the intensity of light ?
[5] (c) What is the intensity of light? What is the conclusion from this experiment ?

1a) i)

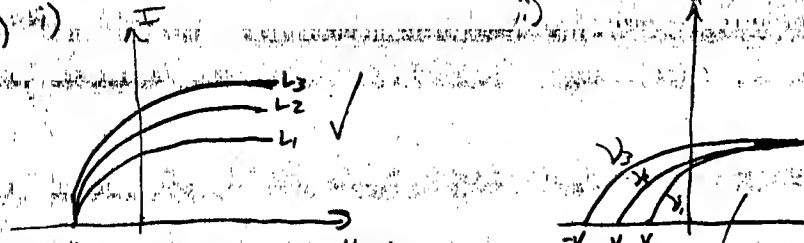

$L_3 > L_2 > L_1$

L - light intensity

ii)

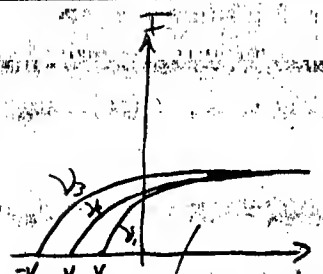

$V_3 > V_2 > V_1$

V - frequency

b) Know at Maximum K.E. that, V_0 the stopping voltage just exactly kills the photoemitted current. Thus the P.E. gain by electrons is the K.E. lost.

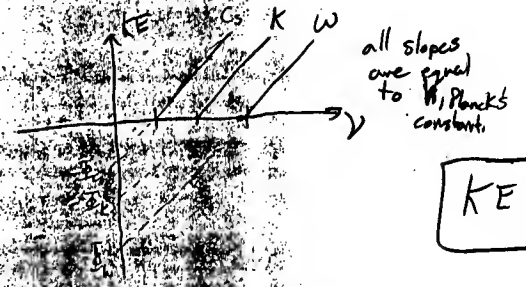

$KE = h\nu - \Phi$

Maximum KE does not depend on light.

KE depends on frequency of incident light.

c) The intensity of light is directly proportional to the number of photons passing through unit area, per unit time. The constant of proportionality is Planck's constant.

$\frac{\Delta N_{ph} h\nu}{A \Delta t}$

$h\nu$ photon energy; $\frac{\Delta N_{ph}}{A \Delta t}$ Photon flux ✓

Conclusions of photoelectric experiment

1. $KE \propto L$
2. KE does not depend on L
3. KE depend on frequency
4. Φ is property of material ✓

Your Last Name First Name Student Number

[7] **2.** (a) Explain briefly the *significance* of the quantum numbers n, ℓ, m_ℓ, m_s. What are the allowed values of n, ℓ, m_ℓ, m_s? Show the ordering of the energy levels for an electron in a many-electron atom from n = 1 to n = 4 level (including n = 4).
Note: 4s is above 3p and below 3d; but 4p is above 3d.

[4] (b) State the Pauli Exclusion Principle and Hund's rule.

[14] (c) Draw the energy diagrams for the electronic structure of
(i) atomic silicon (atomic number 14) and
(ii) atomic nitrogen (atomic number 7).
Ensure that your diagrams are clear and that each electron can be assigned its quantum numbers appropriately.
[Note: You can use a box to represent an orbital wavefunction, ψ_{n,ℓ,m_ℓ}. Relative energies of the boxes must, however, be shown]

Your Last Name First Name Student Number

[9] **3.** (a) Sketch the energy band diagram of a metal and identify the various significant features in your diagram.

[8] (b) Sketch the energy band diagram of a metal when a voltage difference is applied across it. How does conduction occur? Why are metals conductors.

[8] (c) Sketch the energy band diagram of a semiconductor and identify the various significant features in your diagram. Why are semiconductors insulators at low temperatures? What would happen if a photon of energy $h\upsilon > E_g$ is incident on this semiconductor?

25] **4.** Explain with clear diagrams the basic principle of operation of the Er^{3+} ion doped fiber amplifier. Sketch schematically how this may be used in optical communications.

The Er^{3+} doped fiber amplifier (EDFA) is based on the principle of Stimulated emission. For stimulated emission to occur, population inversion is needed. Population inversion is a greater number of e^- at an energy level higher than ground state, than e^- at ground state. $N_2 > N_1$. Population inversion is created by a pumping mechanism. In the case of EDFA photons of wavelength 980nm optical excite the e^- to an energy of 1.27 eV and 1.54 eV called E_3 and E_3', respectfully. These excited e^- are then decayed without radiative emissions to E_2. These is where stimulated emission occurs. A photon of $\lambda = 1550$nm, which has an energy $E_2 - E_1$, influences the e^- at the E_2 to fall to E_1, AND emitting photons of same wavelength, direction, and in phase with orginal photon. as shown in Fig. 1 below

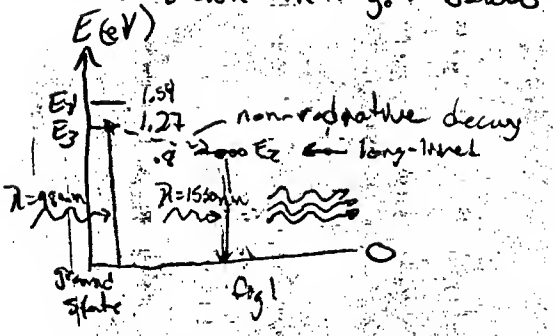

Fig 1

Excellent

25!

This can be used in optical communications using the follow diagram.

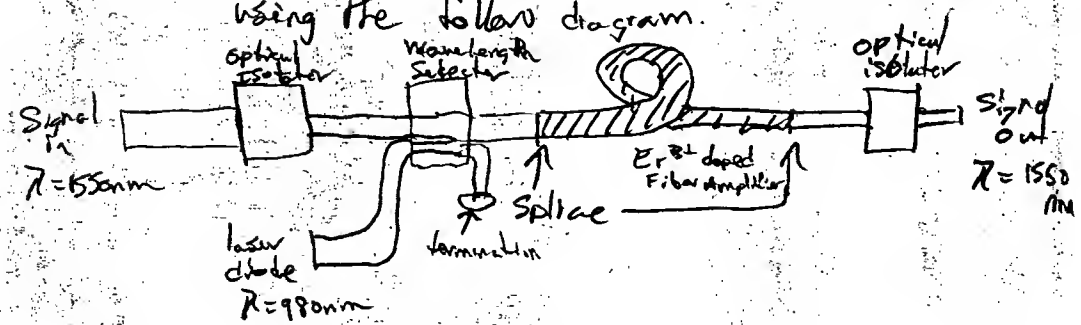

Fig 2

UNIVERSITY OF SASKATCHEWAN
COLLEGE OF ENGINEERING

ELECTRICAL ENGINEERING EE317.3

Midterm Examination
Part B (Open Book)

Instructor: S.O. Kasap
Time allowed: Part B is 1 hour

October 24, 2000

Note: Open book examination. Calculators are allowed. *Answer any 2 questions from 3 questions.* All questions carry equal marks. Marks for part-questions are shown in [ ] in the left hand margin. All answers must be given in conventional units. State clearly all assumptions made in your derivations. Method of solution must be clearly shown. Numerical mistakes, incorrect, unconventional or missing units will be heavily penalized. Mention the source of materials data used.

Important: *You must hand in Part A before you can start Part B.* Write your answers in the university answer book.

---

[12] **1.** **a** In a photoelectric experiment, it is found that an infrared (IR) radiation of wavelength 8400Å is the longest wavelength radiation which can cause photoemission of electrons from a photocathode made of Sb-K-Na-Cs. If a blue radiation of wavelength 4500Å is incident onto this photocathode, what will be the kinetic energy of the photoemitted electrons in electron volts? What is the voltage required on the anode to extinguish the photocurrent?

[13] **b** Suppose that the blue light of wavelength 4500Å has an intensity of 10 mW/cm^2. Suppose that the photocathode is a disk of diameter 3 mm. Suppose that the incident radiation illuminates the whole photocathode and a large positive voltage is applied to the anode to collect all the photoemitted electrons. Suppose that the quantum efficiency (η) of the photocathode is 20%. What is be the photoelectric current?
Quantum efficiency = (Number of electrons emitted)/(Number of photons absorbed)

[*Reminder:* 1Å =10^{-10}m]

---

[9] **2.** **a** A projectile electron with a velocity 2.5×10^6 m s^{-1} collides with a hydrogen atom in a gas discharge tube. Find to which n-th energy level the electron in the hydrogen atom gets excited to and the Bohr radius of the excited electron.

[7] **b** Calculate the possible wavelengths of radiation (in Å) that will be emitted from the excited H-atom in the above example as the electron returns to its ground state.

[*Reminder:* 1Å =10^{-10}m]

[9] **c** In a gas discharge tube, He^+ ions are to be further ionized to He^{++} via impact ionization with electrons accelerated by an applied voltage. Calculate the minimum theoretical voltage required to achieve the ionization.

---

3. A particular He-Ne laser operating at 632.8 nm has a tube that is 60 cm long. The operating temperature is 127 °C

[6] **a** Estimate the Doppler broadened linewidth ($\Delta\lambda$) in the output spectrum.

[5] **b** What are the mode number m values that satisfy the resonant cavity condition? How many modes are therefore allowed?

[7] **c** What is the separation $\Delta\upsilon_m$ in the frequencies of the modes? What is the mode separation $\Delta\lambda_m$ in wavelength.

[7] **d** Show that if during operation, the temperature changes the length of the cavity by δL, the wavelength of a given mode changes by $\delta\lambda_m$,

$$\delta\lambda_m = \frac{\lambda_m}{L}\delta L$$

Given that typically a glass has a linear expansion coefficient $\alpha \approx 10^{-6}\,K^{-1}$, calculate the change $\delta\lambda_m$ in the output wavelength (due to one particular mode) as the tube warms up from 20 °C to 125 °C, and also per degree change in the operating temperature. Note that $\delta L/L = \alpha\delta T$, and $L' = L[1 + \alpha(T' - T)]$. Change in mode wavelength $\delta\lambda_m$ with the change δL in the cavity length L is called *mode sweeping*.

UNIVERSITY OF SASKATCHEWAN
COLLEGE OF ENGINEERING

ELECTRICAL ENGINEERING EE317.3

Midterm Examination
Part A (Closed Book)

Instructor: S.O. Kasap
Time allowed: Part A is 1 hour.

October 30, 1998

Note: Closed book examination. No calculators are allowed for this part. *Answer any 2 questions from 4 questions.* All questions carry equal marks. Marks for part–questions are shown in [ ] in the left hand margin. All answers must be given in conventional units. All sketches must be clearly labeled and self-explanatory. Diagrams that are not properly and clearly labeled and are subject to ambiguity will be heavily penalized. State clearly all assumptions made in your derivations. Unless otherwise stated all % are in weight % (%). Write your answers in this question book. You can use both sides of the paper for your answers.

Note: You must hand in this exam question book (Part A) before you can start on Part B.

1. Consider the photoelectric experiment.

[10] (a) Sketch the current-voltage characteristics for both negative and positive anode voltages when the photocathode is

(i) illuminated with the same frequency but different intensity light,

(ii) illuminated with the same intensity but different frequency light.

[10] (b) How is the maximum kinetic energy of the photo-emitted electrons determined? Sketch the dependence of the maximum kinetic energy of the photoemitted electrons on the frequency of light for different cathode materials. How does the maximum kinetic energy depend on the intensity of light ? KE does not depend on light intensity

[5] (c) What is the intensity of light? What is the conclusion from this experiment ?

[7] **2.** (a) Explain briefly the *significance* of the quantum numbers n, ℓ, m_ℓ, m_s. What are the allowed values of n, ℓ, m_ℓ, m_s? Show the ordering of the energy levels for an electron in a many-electron atom from n = 1 to n = 4 level (including n = 4).
Note: 4s is above 3p and below 3d; but 4p is above 3d.

[4] (b) State the Pauli Exclusion Principle and Hund's rule. $5^1 2p^1$; $5s^5$

[14] (c) Draw the energy diagrams for the electronic structure of

(i) atomic silicon (atomic number 14) and

(ii) atomic nitrogen (atomic number 7).

Ensure that your diagrams are clear and that each electron can be assigned its quantum numbers appropriately.

[Note: You can use a box to represent an orbital wavefunction, ψ_{n,ℓ,m_ℓ}. Relative energies of the boxes must, however, be shown]

3. (a) Sketch the energy band diagram of a metal and identify the various significant features in your diagram.

(b) Sketch the energy band diagram of a metal when a voltage difference is applied across it. How does conduction occur?

(c) Sketch the energy band diagram of a semiconductor and identify the various significant features in your diagram.

4. Explain with clear diagrams the basic principle of operation of the Er^{3+} ion doped fiber amplifier. Sketch schematically how this may be used in optical communications.

UNIVERSITY OF SASKATCHEWAN
COLLEGE OF ENGINEERING

ELECTRICAL ENGINEERING EE317.3

Midterm Examination
Part B (Open Book)

Instructor: S.O. Kasap October 30, 1998
Time allowed: Part B is 1 hour

Note: Open book examination. Calculators are allowed. *Answer any 2 questions from 3 questions.* All questions carry equal marks. Marks for part–questions are shown in [ ] in the left hand margin. All answers must be given in conventional units. State clearly all assumptions made in your derivations. Method of solution must be clearly shown. Numerical mistakes, incorrect, unconventional or missing units will be heavily penalized. Mention the source of materials data used.

Important: *You must hand in Part A before you can start Part B.* Write your answers in the university answer book.

---

1. From Hall effect measurements, the electron drift mobility in tin (Sn, valency IV) has been determined to be 3.9 $cm^2V^{-1}s^{-1}$ at 27° C. Atomic weight and density of Sn are given as 118.7 and 7.30 g cm^{-3} respectively.

[12] (a) Assuming that each Sn atom contributes 4 conduction electrons, calculate the resistivity of Sn at 0° C.

[13] (b) Consider a thin tin bar of lenght L = 2 cm, width W = 0.5 cm, depth D = 1 mm, carrying a current of 5 mA and placed in a magnetic field of flux density B = 0.2 T. The current flows along the length L and the magnetic field is along depth D. The resulting Hall voltage is measured across the width W. What is the Hall voltage? Why is the voltage "small"?

---

2. A multialkali metal metal is to be used as the photocathode material in a photoemissive electron tube. The work function of the metal is 1.5 eV. Suppose that blue light of wavelength 450 nm with an intensity of 100 mW cm^{-2} is incident on the photocathode.

[13] (a) If the emitted electrons are collected by applying a positive bias to the anode, what will be the photoelectric current density assuming that the quantum efficiency (η) is 20%.
Note: Quantum efficiency is defined by

Quantum efficiency = (Number of electrons emitted) / (Number of photons absorbed)

[4] (b) What should be the voltage and its polarity to extinguish the current?

[8] (c) What should be the intensity of an incident red light beam of wavelength 700 nm that would give the same photocurrent, assuming that the quantum efficiency is the same.

---

[6] **3.** (a) Show that the wavelengths of radiation emitted (or absorbed) from a hydrogenic atom obey the equation (Balmer-Rydberg Formula):

$$\lambda^{-1} = R_\infty Z^2[n_1^{-2} - n_2^{-2}] \qquad (3.1)$$

where R_∞ is the Rydberg constant and has the value 1.097373×10^7 m^{-1}, and n_2 and n_1 are principal quantum numbers with $n_2 > n_1$

[10] (b) The light from the sun includes extremely sharp "dark lines" at certain wavelengths superimposed on a bright continuum at all other wavelengths as discovered by Josef von Fraunhofer in 1829. One of these "dark lines" occurs in the orange range and another in the blue. Fraunhofer measured their wavelengths to be 6563Å and 4861Å , respectively. With the aid of Table Q.3, show that these are spectral lines from the Hydrogen atom spectrum (they are called the H_α and H_β Fraunhofer lines). Such lines provided us with the first clues to the chemical composition of the sun.

[9] (c) Radio telescopic studies of B. Höglund and P.G. Mezger (*Science*, **150**, 339, 1965) have detected a 5009MHz electromagnetic radiation in space. Show that this radiation comes from excited hydrogen atoms as they undergo transitions from n = 110 to 109. What is the size of such an excited hydrogen atom (in nm) ?

Table Q.3
Hydrogen Atom Spectral Series and Rydberg Integers

Series	n_1	n_2	Spectral Region
Lyman	1	2,3,4,...	ultraviolet
Balmer	2	3,4,5,...	visible
Paschen	3	4,5,6,...	infrared
Brackett	4	5,6,7,...	infrared
Pfund	5	6,7,8,...	infrared

Your Last Name First Name Student Number

UNIVERSITY OF SASKATCHEWAN
COLLEGE OF ENGINEERING

ELECTRICAL ENGINEERING EE317.3

Midterm Examination
Part A (Closed Book)

48/50 sdk
Very good

Instructor: S.O. Kasap October 25, 1999
Time allowed: Part A is 1 hour.

Note: Closed book examination. No calculators are allowed for this part. *Answer any 2 questions from 4 questions.* All questions carry equal marks. Marks for part–questions are shown in [ ] in the left hand margin. All answers must be given in conventional units. All sketches must be clearly labeled and self-explanatory. Diagrams that are not properly and clearly labeled and are subject to ambiguity will be heavily penalized. State clearly all assumptions made in your derivations. Unless otherwise stated all % are in weight % (°/o). Write your answers in this question book. You can use both sides of the paper for your answers.

Note: You must hand in this exam question book (Part A) before you can start on Part B.

1. Consider the photoelectric experiment.

[10] (a) Sketch the current-voltage characteristics for both negative and positive anode voltages when the photocathode is
(i) illuminated with the same frequency but different intensity light,
(ii) illuminated with the same intensity but different frequency light.

[10] (b) How is the maximum kinetic energy of the photo-emitted electrons determined? Sketch the dependence of the maximum kinetic energy of the photoemitted electrons on the frequency of light for different cathode materials. How does the maximum kinetic energy depend on the intensity of light ?

[5] (c) What is the intensity of light? What is the conclusion from this experiment ?

(a) (i)

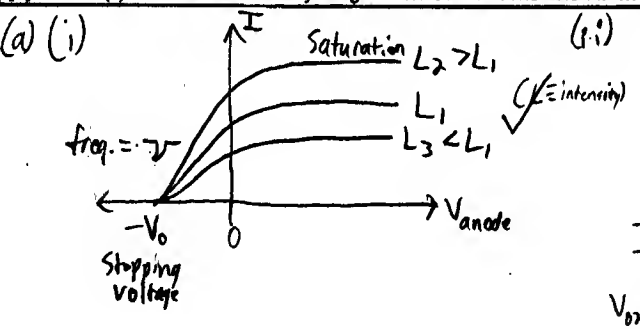

(a) (ii)

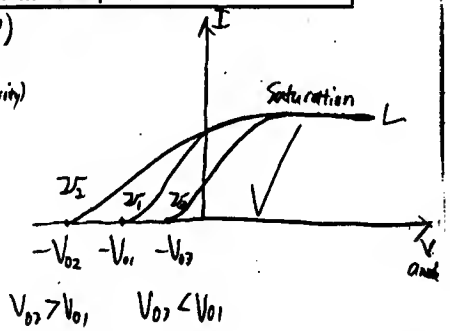

(b) The max. KE (KE_m) is determined by the frequency of incident light and the work function of the photocathode metal. $KE_m = h\nu - \Phi$, where Φ is the work function (the energy required to remove the electron from the metal.

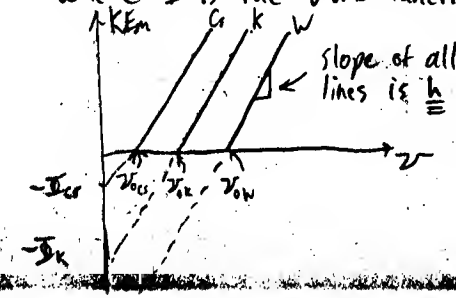

→ The max KE. of photoemitted electrons is not dependent on light intensity. Only frequency affects KE_m

2. (a) Explain briefly the *significance* of the quantum numbers n, ℓ, m_ℓ, m_s. What are the allowed values of n, ℓ, m_ℓ, m_s? Show the ordering of the energy levels for an electron in a many-electron atom from n = 1 to n = 4 level (including n = 4).
Note: 4s is above 3p and below 3d; but 4p is above 3d.

[4] (b) State the Pauli Exclusion Principle and Hund's rule.

[14] (c) Draw the energy diagrams for the electronic structure of
(i) atomic silicon (atomic number 14) and
(ii) atomic nitrogen (atomic number 7).

Ensure that your diagrams are clear and that each electron can be assigned its quantum numbers appropriately.
[Note: You can use a box to represent an orbital wavefunction, ψ_{n,ℓ,m_ℓ}. Relative energies of the boxes must, however, be shown]

Your Last Name First Name Student Number

[9] 3. (a) Sketch the energy band diagram of a metal and identify the various significant features in your diagram.
[8] (b) Sketch the energy band diagram of a metal when a voltage difference is applied across it. How does conduction occur?
[8] (c) Sketch the energy band diagram of a semiconductor and identify the various significant features in your diagram.

Your Last Name First Name Student Number

[25] 4. Explain with clear diagrams the basic principle of operation of the Er^{3+} ion doped fiber amplifier. Sketch schematically how this may be used in optical communications.

The Er^{3+} doped fiber amplifier works via the principle of stimulated emission. This principle states that when an electron that is excited from energy E_1 to E_2 is influenced by a photon of energy E_2-E_1, the electron will drop to E_1 and emit a photon of energy E_2-E_1 that is in phase with the stimulating photon. If more electrons (atoms) are at E_2 than E_1 then stimulated emission will overcome photon absorption and amplification occurs. Having more atoms at E_2 than E_1 (population inversion) can be achieved via pumping:

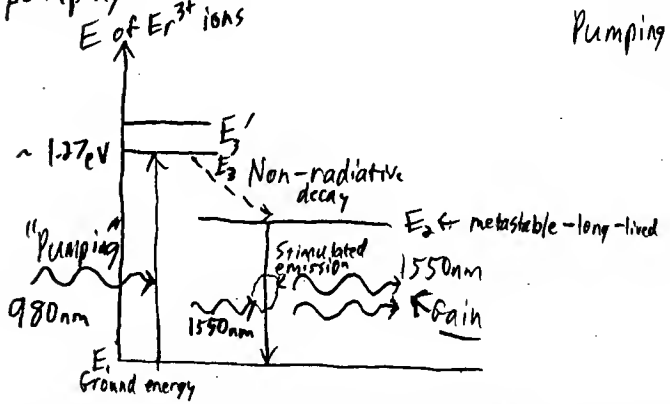

Pumping: Atoms at the ground energy are excited to E_3 via incident light of 980nm (for Er^{3+}). They drop to the long-lived state E_2 where they are ready to be stimulated.

These principles can be applied practically to boost fiberoptic signals with the following setup:

25

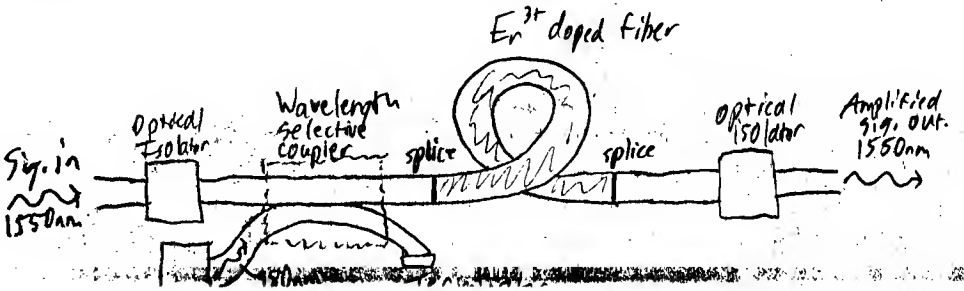

UNIVERSITY OF SASKATCHEWAN
COLLEGE OF ENGINEERING

ELECTRICAL ENGINEERING EE317.3

Midterm Examination
Part B (Open Book)

Instructor: S.O. Kasap October 25, 1999
Time allowed: Part B is 1 hour

Note: Open book examination. Calculators are allowed. *Answer any 2 questions from 3 questions.* All questions carry equal marks. Marks for part–questions are shown in [ ] in the left hand margin. All answers must be given in conventional units. State clearly all assumptions made in your derivations. Method of solution must be clearly shown. Numerical mistakes, incorrect, unconventional or missing units will be heavily penalized. Mention the source of materials data used.

Important: *You must hand in Part A before you can start Part B.* Write your answers in the university answer book.

---

1. Consider the photoelectric experiment.

[4] (a) Sketch the I-V characteristics for both negative and positive anode voltage when the photocathode is
(i) illuminated with the same frequency but different intensity light,
(ii) illuminated with the same intensity but different frequency light.

[7] (b) Sketch the dependence of the maximum kinetic energy of the photoemitted electrons on the frequency of light for different cathode materials. How does the maximum kinetic energy depend on the intensity of light ? What is the intensity of light? What is the conclusion from this experiment ?

[14] (c) A multialkali metal (e.g. Sb-K-Na/Cs) metal is to be used as the photocathode material in a photoemissive electron tube. It is found that the longest wavelength radiation that gives photoemission is 420nm.

(i) If violet radiation of wavelength 390nm is incident on to this photocathode, what will be the kinetic energy of the photoemitted electrons in electron volts? What should be the voltage required on the opposite electrode to extinguish the external photocurrent ?

(ii) Suppose that the violet light of wavelength 390nm has an intensity of 50 mW cm^{-2}. If the emitted electrons are collected by applying a positive bias to the anode, what will be the photoelectric current density assuming that the quantum efficiency (η) is 20%.

Note: Quantum efficiency is defined by
Quantum efficiency = (Number of electrons emitted)/(Number of photons absorbed)

---

[6] **2.** (a) Show that the wavelengths of radiation emitted (or absorbed) from a hydrogenic atom obey the equation (Balmer-Rydberg Formula):

$$\lambda^{-1} = R_\infty Z^2[n_1^{-2} - n_2^{-2}] \qquad (2.1)$$

where R_∞ is the Rydberg constant and has the value 1.097373×10^7 m^{-1}, and n_2 and n_1 are principal quantum numbers with $n_2 > n_1$.

[10] (b) The light from the sun includes extremely sharp "dark lines" at certain wavelengths superimposed on a bright continuum at all other wavelengths as discovered by Josef von Fraunhofer in 1829. One of these "dark lines" occurs in the orange range and another in the blue. Fraunhofer measured their wavelengths to be 6563Å and 4861Å , respectively. With the aid of Table Q.2, show that these are spectral lines from the Hydrogen atom spectrum (they are called the H_α and H_βFraunhofer lines). Such lines provided us with the first clues to the chemical composition of the sun.

[9] (c) Radio telescopic studies of B. Höglund and P.G. Mezger (*Science*, **150**, 339, 1965) have detected a 5009MHz electromagnetic radiation in space. Show that this radiation comes from excited hydrogen atoms as they undergo transitions from $n = 110$ to 109. What is the size of such an excited hydrogen atom (in nm) ?

Table Q.2
Hydrogen Atom Spectral Series and Rydberg Integers

Series	n_1	n_2	Spectral Region
Lyman	1	2,3,4,...	ultraviolet
Balmer	2	3,4,5,...	visible
Paschen	3	4,5,6,...	infrared
Brackett	4	5,6,7,...	infrared
Pfund	5	6,7,8,...	infrared

---

3. A particular He-Ne laser operating at 632.8 nm has a tube that is 50 cm long. The operating temperature is 120 °C

[6] (a) Estimate the Doppler broadened linewidth ($\Delta\lambda$) in the output spectrum.

[5] (b) What are the mode number m values that satisfy the resonant cavity condition? How many modes are therefore allowed?

[7] (c) What is the separation $\Delta\upsilon_m$ in the frequencies of the modes? What is the mode separation $\Delta\lambda_m$ in wavelength.

[7] (d) Show that if during operation, the temperature changes the length of the cavity by δL, the wavelength of a given mode changes by $\delta\lambda_m$,

$$\delta\lambda_m = \frac{\lambda_m}{L}\delta L$$

Given that typically a glass has a linear expansion coefficient $\alpha \approx 10^{-6}$ K^{-1}, calculate the change $\delta\lambda_m$ in the output wavelength (due to one particular mode) as the tube warms up from 20 °C to 130 °C, and also per degree change in the operating temperature. Note that $\delta L/L = \alpha\delta T$, and $L' = L[1 + \alpha(T' - T)]$. Change in mode wavelength $\delta\lambda_m$ with the change δL in the cavity length L is called *mode sweeping*.

PHYSICAL CONSTANTS AND USEFUL INFORMATION

$c = 2.9979 \times 10^{8}$ m s^{-1}
$e = 1.6021 \times 10^{-19}$ C
$m_e = 9.1091 \times 10^{-31}$ kg
$h = 6.62608 \times 10^{-34}$ J s
$\hbar = h/(2\pi) = 1.05459 \times 10^{-31}$ J s

$N_A = 6.0221 \times 10^{23}$ mol^{-1}
$k = 1.3807 \times 10^{-23}$ J K^{-1}
$\varepsilon_o = 8.8542 \times 10^{-12}$ F m^{-1}
$\mu_o = 4\pi \times 10^{-7}$ H m^{-1}

Gas constant, $R = N_A k = 8.3144$ J K^{-1} mol^{-1} = 0.083144 L.bar K^{-1} mol^{-1}
Mass of proton = 1.67495×10^{-27} kg
Mass of hydrogen atom = 1.6736×10^{-27} kg
Acceleration due to gravity (at 45° latitude), g = 9.81 m s^{-2}

UNITS

SI UNITS

Length	meter	m
Mass	kilogram	kg
Time	second	s
Electric current	ampere	A
Temperature	kelvin	K

DERIVED SI UNITS

Electric charge	coulomb	C = A s
Electrical resistance	ohm	$\Omega = V/A = kg\ m^2\ A^{-2}\ s^{-3}$
Electrical conductance	siemen	$S = 1/\Omega$
Electrical capacitance	farad	$F = A\ s\ V^{-1} = A^2\ s^4\ kg^{-1}\ m^{-2}$
Electrical inductance	henry	$H = V\ s\ A^{-1} = kg\ m^2\ s^{-1}\ A^{-2}$
Energy	joule	$J = kg\ m^2\ s^{-2} = N\ m$
Force	newton	$N = kg\ m\ s^{-2}$
Magnetic flux	weber	$Wb = V\ s = kg\ m^2\ A^{-1}\ s^{-2}$
Magnetic flux density	tesla	$T = Wb\ m^{-2} = V\ s\ m^{-2} = kg\ A^{-1}\ s^{-2}$
Pressure	pascal	$Pa = N\ m^{-2}$
Power	watt	$W = J\ s^{-1} = kg\ m^2\ s^{-3}$
Electric potential difference	volt	$V = N\ m\ C^{-1} = kg\ m^2\ s^{-3}\ A^{-1}$
Frequency	hertz	$Hz = s^{-1}$

UNIVERSITY OF SASKATCHEWAN
COLLEGE OF ENGINEERING

ELECTRICAL ENGINEERING EE317.3
Final
~~Midterm~~ Examination
Part B

Instructor: S.O. Kasap December 20, 1999
Time allowed: Part B is nominally 1 1/2 hour.
Total time allowed: 3 hours for Parts A and B.
Note: Open book examination. Only the course textbook is allowed; no other material is permitted. Calculators are allowed. *Answer any 3 questions from 4 questions.* If you answer more than 3 questions, only the first three will be marked. All questions carry equal marks. Marks for a part–question depend on the difficulty of the question. Marks for part–questions are shown in [ ] in the left hand margin. All answers must be given in conventional units. State clearly all assumptions made in your derivations. Method of solution must be clearly shown. Numerical mistakes, incorrect, unconventional or missing units will be heavily penalized. Mention the source of materials data used.

Important: *You must hand in Part A before you can start Part B.* Write your answers in the university answer book.

[7] 1) (a) Consider the metals in Table Q1 from groups I, II and III in the Periodic Table. Calculate the Fermi energies at absolute zero and at room temperature (300 K), and compare the values with the experimental values. What is your conclusion?

Table Q1

Metal	Group	M_m (g/mol)	Density (g cm^{-3})	E_F (eV) [Calculated]	E_F (eV) [Experiment]
Cu	I	63.55	8.96	-	6.5
Zn	II	65.38	7.14	-	11.0
Al	III	27	2.70	-	11.8

[10] (b) Aluminum is a Valency III metal with the Fermi energy E_F in Table Q.1. Given its resistivity at room temperature (See Table in Textbook), the atomic concentration of aluminum (from its density) and the valency (III) find the mean free path and the drift mobility of conduction electrons. State your assumptions in your derivations and calculations.

2) An *n*-type Si sample has been doped with 10^{14} arsenic (P) atoms cm^{-3}. The donor energy level for P in Si is 0.045 eV below the conduction band edge energy.

[2] (a) Calculate the room temperature conductivity of the sample.
[3] (b) Estimate the temperature above which the sample behaves as if intrinsic.
[4] (c) *Estimate* the lowest temperature (°C) above which nearly all (most) of the donors are ionized.
[2] (d) What is the useful temperature range for a Hall effect device that uses this *n*-type semiconductor to measure a magnetic field; calibration should not change with the temperature.
[6] (e) Calculate the necessary acceptor doping that is required to make this sample *p*-type with approximately the same conductivity. Note: You may have to use interpolation.

[7] **3.** (a) GaAs has an effective density of states at the conduction conduction band (CB) N_c of 4.7×10^{17} cm^{-3} and an effective density of states at the valence band (VB) edge N_v of 7×10^{18} cm^{-3}. Given its bandgap E_g of 1.42 eV calculate the intrinsic concentration and the intrinsic resistivity at room temperature (take as 300 K). Where is the Fermi level? Assuming that N_c and N_v scale as $T^{3/2}$, what would be the intrinsic concentration at 100 °C? If this GaAs crystal is doped with 10^{18} donors cm^{-3} (such as Te), where is the new Fermi level and what is the resistivity of the sample? The drift mobilities in GaAs are shown in Table Q.3.

Table Q.3: Dopant impurities scatter carriers and reduce the drift mobility (μ_e for electrons and μ_h for holes).

Dopant concentration (cm^{-3})	0	10^{15}	10^{16}	10^{17}	10^{18}
μ_e (cm^2 V^{-1} s^{-1})	8500	8000	7000	5000	2400
μ_h (cm^2 V^{-1} s^{-1})	400	380	310	250	160

[10] (b) State your assumptions in the following calculations:

(i) Calculate the thermal velocity of the conduction band electrons in GaAs (relevant effective mass is that for transport). Is this greater or smaller than the mean speed of the conduction electrons in a metal? Why is their such a big difference?

(ii) Calculate the mean free time and mean free path between electron scattering events (between electrons and lattice vibrations).

(iii) Calculate the drift velocity of the CB electrons in an applied field E of 10^5 V m^{-1}. What is the ratio of thermal velocity to drift velocity? What is your conclusion?

4. Consider a long *pn* junction diode with an acceptor doping, N_a, of 10^{18} cm^{-3} on the *p*-side and donor concentration of N_d on the *n*-side. The diode is forward biased and has a voltage of 0.6 V across it. The diode cross-sectional area is 1 mm^2. The minority carrier recombination time, τ, depends on the dopant concentration, N_{dopant} (cm^{-3}), through the following approximate relation

$$\tau = \frac{5\times10^{-7}}{\left(1+2\times10^{-17}N_{dopant}\right)}$$

[8] (a) Suppose that $N_d = 10^{15}$ cm^{-3}. Then the depletion layer extends essentially into the *n*-side and we have to consider minority carrier recombination time, τ_h, in this region. Calculate the diffusion and recombination contributions to the total diode current gievn that when $N_a = 10^{18}$ cm^{-3}, $\mu_e \approx 250$ cm^2 V^{-1} s^{-1}, and when $N_d = 10^{15}$ cm^{-3}, $\mu_h \approx 450$ cm^2 V^{-1} s^{-1}. What is your conclusion?

[9] (b) Suppose that $N_d = N_a$. Then W extends equally to both sides and, further, $\tau_e = \tau_h$. Calculate the diffusion and recombination contributions to the diode current given that when $N_a = 10^{18}$ cm^{-3}, $\mu_e \approx 250$ cm^2 V^{-1} s^{-1}, and when $N_d = 10^{18}$ cm^{-3}, $\mu_h \approx 130$ cm^2 V^{-1} s^{-1}. What is your conclusion ? State all your assumptions.

PHYSICAL CONSTANTS AND USEFUL INFORMATION

$c = 2.9979 \times 10^8$ m s^{-1}
$e = 1.6021 \times 10^{-19}$ C
$m_e = 9.1091 \times 10^{-31}$ kg
$h = 6.62608 \times 10^{-34}$ J s
$\hbar = h/(2\pi) = 1.05459 \times 10^{-31}$ J s
$N_A = 6.0221 \times 10^{23}$ mol^{-1}
$k = 1.3807 \times 10^{-23}$ J K^{-1}
$\varepsilon_o = 8.8542 \times 10^{-12}$ F m^{-1}
$\mu_o = 4\pi \times 10^{-7}$ H m^{-1}

Gas constant, $R = N_A k = 8.3144$ J K^{-1} mol^{-1} = 0.083144 L.bar K^{-1} mol^{-1}
Mass of proton = 1.67495×10^{-27} kg
Mass of hydrogen atom = 1.6736×10^{-27} kg
Acceleration due to gravity (at 45° latitude), g =9.81 m s^{-2}

UNITS

SI UNITS

Length	meter	m
Mass	kilogram	kg
Time	second	s
Electric current	ampere	A
Temperature	kelvin	K

DERIVED SI UNITS

Electric charge	coulomb	C = A s
Electrical resistance	ohm	Ω = V/A = kg m^2 A^{-2} s^{-3}
Electrical conductance	siemen	S = 1/Ω
Electrical capacitance	farad	F = A s V^{-1} = A^2 s^4 kg^{-1} m^{-2}
Electrical inductance	henry	H = V s A^{-1} = kg m^2 s^{-1} A^{-2}
Energy	joule	J = kg m^2 s^{-2} = N m
Force	newton	N = kg m s^{-2}
Magnetic flux	weber	Wb = V s = kg m^2 A^{-1} s^{-2}
Magnetic flux density	tesla	T = Wb m^{-2} = V s m^{-2} = kg A^{-1} s^{-2}
Pressure	pascal	Pa=N m^{-2}
Power	watt	W=J s^{-1}=kg m^2 s^{-3}
Electric potential difference	volt	V = N m C^{-1} = kg m^2 s^{-3} A^{-1}
Frequency	hertz	Hz = s^{-1}

SOME CONVERSION FACTORS

ENERGY

1 kJ mole^{-1} = 0.2389 kcal mol^{-1} = 0.010363 eV atom^{-1}

1 kcal mole^{-1} = 4.1840 kJ mol^{-1} = 0.043360 eV atom^{-1}

1 eV atom^{-1} = 96.490 kJ mol^{-1} = 23.062 kcal mol^{-1}

1 ft lb = 1.356 J
1 BTU = 1055 J

1 erg = 10^{-7} J
1 kWh = 3.600×10^6 J

How strong is the electron-electron repulsion energy?

PHYSICAL CONSTANTS AND USEFUL INFORMATION

$c = 2.9979 \times 10^{8}$ m.s^{-1} $N_A = 6.0220 \times 10^{23}$ mol^{-1}

$e = 1.6021 \times 10^{-19}$ C $k = 1.3805 \times 10^{-23}$ J.K^{-1}

$m_e = 9.1091 \times 10^{-31}$ kg $\varepsilon_0 = 8.8544 \times 10^{-12}$ F.m^{-1}

$h = 6.6256 \times 10^{-34}$ J.s $\mu_0 = 4\pi \times 10^{-7}$ H.m^{-1}

$\hbar = h/2\pi = 1.05459 \times 10^{-31}$ J.s

Gas constant, $R = N_A k = 8.3144$ J.K^{-1}.mol^{-1} = 0.083144 L.bar.K^{-1}.mol^{-1}
Rydberg constant, $R_\infty = 1.0974 \times 10^{7}$ m^{-1} ; $R_0 = 3.2880 \times 10^{15}$ s^{-1}
Bohr radius $a_0 = 52.918$ pm
Mass of proton = 1.67495×10^{-27} kg
Mass of hydrogen atom = 1.66×10^{-27} kg
Franck-Wiedemann-Lorentz coefficient = 2.32×10^{-8} W.Ω.K^{-2}
Bohr Magneton = $\beta = 9.2741 \times 10^{-24}$ J.T^{-1}
Accelaration due to gravity (at 45° latitude), g=9.81 m.s^{-2}

UNITS

SI UNITS

Length	meter m	
Mass	kilogram	kg
Time	second	s
Electric current	ampere	A
Temperature	kelvin K	

DERIVED UNITS

Force	newton	N = kg.m.s^{-2}
Pressure	pascal	Pa=N.m^{-2}
Energy	joule	J = kg.m^2.s^{-2}= N.m
Electric charge	coulomb	C = A s
Electric potential difference	volt	V = N.m.C^{-1} = kg.m^2.s^{-3}.A^{-1}
Frequency	hertz	Hz = s^{-1}

MATERIALS DATA

Table of Nordheim Coefficient (at 20°C) for Dilute Alloys

Solute in Solvent (Element in matrix)	Nordheim Coefficient nΩ.m.	Maximum Solubility at 25°C at. %
Au in Cu matrix	5500	100
Mn in Cu matrix	2900	24
Ni in Cu matrix	1250	100
Sn in Cu matrix	2900	0.6
Zn in Cu matrix	300	30
Cu in Au matrix	450	100
Mn in Au matrix	2410	25
Ni in Au matrix	790	100
Sn in Au matrix	3360	5
Zn in Au matrix	950	15

NOTES

< >	average
<v>	average v
ab/cd	(ab)/(cd) or $\frac{a\,b}{c\,d}$
F	vector F

All symbols have their usual meanings within context .

GENERAL PHYSICS

$n_{at} = \rho N_A / M_{at}$

$d = 1 / (n^{1/3})$

$2d\sin\theta = n\lambda;\quad n=1, 2, 3, \ldots$

$\lambda = c / \upsilon$

$$\frac{d\lambda}{d\upsilon} = -\frac{c}{\upsilon^2} = -\frac{\lambda}{\upsilon} = -\frac{\lambda^2}{c}$$

$$\upsilon_{observer} = \upsilon_o\left[1 + \frac{v_x}{c}\right]$$

$$n\left(\frac{\lambda}{2}\right) = L$$

KINETIC THEORY

$P = {}^1/_3 nm\langle v^2\rangle = {}^1/_3 \rho\langle v^2\rangle$

$\langle KE\rangle = {}^1/_2 m\langle v^2\rangle = {}^3/_2 kT$

$\frac{1}{2}m\,\overline{v^2} = \frac{3}{2}k\,T$

$U = N_A({}^1/_2 m\langle v^2\rangle) = {}^3/_2 N_A kT$

$C_V = [\partial U/\partial T]_V = {}^3/_2 kN_A = {}^3/_2 R$

$C_V = [\partial U/\partial T]_V = 3R = 25 J.K^{-1}.mole^{-1}$

$n_v(v) = 4\pi N(m/2\pi kT)^{3/2} v^2 \exp(-mv^2/2kT)$

$n_E(E) = 2\pi N(\pi kT)^{-3/2} E^{1/2} \exp(-E/kT)$

$v_{rms} = [4kTRB]^{1/2}$

CONDUCTION

$J_x = \Delta Q / (A\Delta t) = (enAv_{dx}\Delta t) / (A\Delta t) = env_{dx}$

$J_x(t) = env_{dx}(t)$

$v_{dx} = e\tau E_x / m_e$

$v_{dx} = \mu_d E_x$

$\mu_d = \frac{e\tau}{m_e}$

$J_x = en\mu_d E_x$

$\sigma = en\mu_d = \frac{e^2 n\tau}{m_e}$

$\sigma = en\mu_e + ep\mu_h$

EE317.3 FORMULAE
Page 1

NOTES
< > average
<v> average v
ab/cd (ab)/(cd) or $\frac{a\,b}{c\,d}$
F vector F
All symbols have their usual meanings within context .
GENERAL PHYSICS
$n_{at} = \rho N_A / M_{at}$
$d = 1 / (n^{1/3})$
$2d\sin\theta = n\lambda;\quad n=1, 2, 3, \ldots$
$\lambda = c / \upsilon$
$$\frac{d\lambda}{d\upsilon} = -\frac{c}{\upsilon^2} = -\frac{\lambda}{\upsilon} = -\frac{\lambda^2}{c}$$
$$\upsilon_{observer} = \upsilon_o\left[1 + \frac{v_x}{c}\right]$$
$$n\left(\frac{\lambda}{2}\right) = L$$
KINETIC THEORY
$P = {}^1/_3 nm\langle v^2\rangle = {}^1/_3 \rho\langle v^2\rangle$
$\langle KE\rangle = {}^1/_2 m\langle v^2\rangle = {}^3/_2 kT$
$\frac{1}{2}m\,\overline{v^2} = \frac{3}{2}k\,T$
$U = N_A({}^1/_2 m\langle v^2\rangle) = {}^3/_2 N_A kT$
$C_V = [\partial U/\partial T]_V = {}^3/_2 kN_A = {}^3/_2 R$
$C_V = [\partial U/\partial T]_V = 3R = 25 J.K^{-1}.mole^{-1}$
$n_v(v) = 4\pi N(m/2\pi kT)^{3/2} v^2 \exp(-mv^2/2kT)$
$n_E(E) = 2\pi N(\pi kT)^{-3/2} E^{1/2} \exp(-E/kT)$
$v_{rms} = [4kTRB]^{1/2}$
CONDUCTION
$J_x = \Delta Q / (A\Delta t) = (enAv_{dx}\Delta t) / (A\Delta t) = env_{dx}$
$J_x(t) = env_{dx}(t)$
$v_{dx} = e\tau E_x / m_e$
$v_{dx} = \mu_d E_x$
$\mu_d = \frac{e\tau}{m_e}$
$J_x = en\mu_d E_x$
$\sigma = en\mu_d = \frac{e^2 n\tau}{m_e}$
$\sigma = en\mu_e + ep\mu_h$

$$\tau = \frac{1}{SuN_s}$$

$$1/\tau = 1/\tau_T + 1/\tau_I$$

$$1/\mu_d = 1/\mu_L + 1/\mu_I$$

$$\rho = \rho_T + \rho_R$$

$$\alpha_0 = \frac{\delta\rho}{\rho_0 \delta T}$$

$$\rho = \rho_o [1 + \alpha_0 (T - T_0)]$$

$$\rho_I = C\,X\,(1-X)$$

$$\rho = \rho_{matrix} + CX(1-X)$$

$$R_{eff} = L_\alpha \rho_\alpha / A + L_\beta \rho_\beta / A$$

$$\rho_{eff} = \chi_\alpha \rho_\alpha + \chi_\beta \rho_\beta$$

$$\sigma_{eff} = \chi_\alpha \sigma_\alpha + \chi_\beta \sigma_\beta$$

$$\rho_{eff} = \rho_c (1 + {}^1/_2 \chi_d) / (1 - \chi_d)$$

$$\rho_{eff} = \rho_c (1 - \chi_d) / (1 + 2\chi_d)$$

$$\delta = \frac{1}{\sqrt{\frac{1}{2}\omega\sigma\mu}}$$

$$r_{ac} = \rho/A \approx \rho/(2\pi a \delta)$$

$$\mathbf{F} = Q\mathbf{v} \times \mathbf{B}$$

$$R_H = \frac{E_y}{J_x B_z}$$

$$R_H = -\frac{1}{en}$$

$$\dot{Q} = \frac{\delta Q}{\delta t} = -A\kappa \frac{\delta T}{\delta x}$$

$$I = -A\sigma(\delta V/\delta x)$$

$$\frac{\kappa}{\sigma T} = C_{WFL} = 2.45 \times 10^{-8}\ W.\Omega.K^{-2}$$

$$\theta = \frac{L}{A\kappa}$$

$$\dot{Q} = \frac{\Delta T}{\theta}$$

QUANTUM PHYSICS

$$I = \Gamma_{ph} h\upsilon$$

$$\Gamma_{ph} = \frac{\Delta N_{ph}}{A \Delta t}$$

$$\rho = h/\lambda \qquad p = \hbar k \qquad \lambda = h/\rho$$

$$\Psi(x,t) = \psi(x) \exp(-\frac{jEt}{\hbar})$$

EE317.3 FORMULAE
Page 2

$$\tau = \frac{1}{SuN_s}$$

$$1/\tau = 1/\tau_T + 1/\tau_I$$

$$1/\mu_d = 1/\mu_L + 1/\mu_I$$

$$\rho = \rho_T + \rho_R$$

$$\alpha_0 = \frac{\delta\rho}{\rho_0 \delta T}$$

$$\rho = \rho_o [1 + \alpha_0 (T - T_0)]$$

$$\rho_I = C\,X\,(1-X)$$

$$\rho = \rho_{matrix} + CX(1-X)$$

$$R_{eff} = L_\alpha \rho_\alpha / A + L_\beta \rho_\beta / A$$

$$\rho_{eff} = \chi_\alpha \rho_\alpha + \chi_\beta \rho_\beta$$

$$\sigma_{eff} = \chi_\alpha \sigma_\alpha + \chi_\beta \sigma_\beta$$

$$\rho_{eff} = \rho_c (1 + {}^1/_2 \chi_d) / (1 - \chi_d)$$

$$\rho_{eff} = \rho_c (1 - \chi_d) / (1 + 2\chi_d)$$

$$\delta = \frac{1}{\sqrt{\frac{1}{2}\omega\sigma\mu}}$$

$$r_{ac} = \rho/A \approx \rho/(2\pi a \delta)$$

$$\mathbf{F} = Q\mathbf{v} \times \mathbf{B}$$

$$R_H = \frac{E_y}{J_x B_z}$$

$$R_H = -\frac{1}{en}$$

$$\dot{Q} = \frac{\delta Q}{\delta t} = -A\kappa \frac{\delta T}{\delta x}$$

$$I = -A\sigma(\delta V/\delta x)$$

$$\frac{\kappa}{\sigma T} = C_{WFL} = 2.45 \times 10^{-8}\ W.\Omega.K^{-2}$$

$$\theta = \frac{L}{A\kappa}$$

$$\dot{Q} = \frac{\Delta T}{\theta}$$

QUANTUM PHYSICS

$$I = \Gamma_{ph} h\upsilon$$

$$\Gamma_{ph} = \frac{\Delta N_{ph}}{A \Delta t}$$

$$\rho = h/\lambda \qquad p = \hbar k \qquad \lambda = h/\rho$$

$$\Psi(x,t) = \psi(x) \exp(-\frac{jEt}{\hbar})$$

$$\frac{d^2\psi}{dx^2} + \frac{2m}{\hbar^2}[E-V]\,\psi = 0$$

$E = \hbar^2k^2/2m$

$E_n = \hbar^2\pi^2n^2/2ma^2 = h^2n^2/8ma^2$

$\Delta x\Delta p \geq h$ and $\Delta E\Delta t \geq h$

$$k^2 = \frac{2mE}{\hbar^2}$$

$$\alpha^2 = \frac{2m(V_0-E)}{\hbar^2}$$

$$T = \frac{1}{1+D\sinh^2(\alpha a)}$$

$$D = \frac{V_0^2}{4E(V_0-E)}$$

$T = T_0\exp(-2\alpha a)$

$$T_0 = \frac{16E(V_0-E)}{V_0^2}$$

$E_{n_1n_2n_3} = h^2(n_1^2 + n_2^2 + n_3^2) / 8ma^2 = h^2N^2 / 8ma^2$

$V(r) = -Ze^2 / 4\pi\varepsilon_0 r$

$\psi(r,\theta,\phi) = \psi_{n,\ell,m_\ell}(r,\theta,\phi) = R_{n,\ell}(r)Y_{l,m_\ell}(\theta,\phi)$

$P_{n,\ell}(r)\delta r = |R_{n,\ell}(r)|^2r^2\delta r$

$E_n = -me^4Z^2/8\varepsilon_0^2h^2n^2$ $\quad E_n = -Z^2E_1 / n^2 = -Z^2(13.58eV) / n^2$

$r_{max} = \frac{n^2a_0}{Z}$; a_0 = Bohr radius

$L = \hbar\sqrt{[\ell(\ell+1)]}$ $\quad L_z = m_\ell\hbar$

$\Delta\ell = \pm1$ and $\Delta m_\ell = 0, \pm1$.

$S = \hbar\sqrt{[s(s+1)]} = (\hbar\sqrt{3})/2$

$S_z = m_s\hbar$

MODERN THEORY OF SOLIDS AND SEMICONDUCTORS

$N_1/N_2 = \exp[-(E_1-E_2)/kT]$

$$f(E) = \frac{1}{1+\exp(\frac{E-E_F}{kT})}$$

$$E_{F0} = (\frac{h^2}{8m_e})\left[\frac{3n}{\pi}\right]^{2/3}$$

EE317.3 FORMULAE
Page 3

$$\frac{d^2\psi}{dx^2} + \frac{2m}{\hbar^2}[E-V]\,\psi = 0$$

$E = \hbar^2k^2/2m$

$E_n = \hbar^2\pi^2n^2/2ma^2 = h^2n^2/8ma^2$

$\Delta x\Delta p \geq h$ and $\Delta E\Delta t \geq h$

$$k^2 = \frac{2mE}{\hbar^2}$$

$$\alpha^2 = \frac{2m(V_0-E)}{\hbar^2}$$

$$T = \frac{1}{1+D\sinh^2(\alpha a)}$$

$$D = \frac{V_0^2}{4E(V_0-E)}$$

$T = T_0\exp(-2\alpha a)$

$$T_0 = \frac{16E(V_0-E)}{V_0^2}$$

$E_{n_1n_2n_3} = h^2(n_1^2 + n_2^2 + n_3^2) / 8ma^2 = h^2N^2 / 8ma^2$

$V(r) = -Ze^2 / 4\pi\varepsilon_0 r$

$\psi(r,\theta,\phi) = \psi_{n,\ell,m_\ell}(r,\theta,\phi) = R_{n,\ell}(r)Y_{l,m_\ell}(\theta,\phi)$

$P_{n,\ell}(r)\delta r = |R_{n,\ell}(r)|^2r^2\delta r$

$E_n = -me^4Z^2/8\varepsilon_0^2h^2n^2$ $\quad E_n = -Z^2E_1 / n^2 = -Z^2(13.58eV) / n^2$

$r_{max} = \frac{n^2a_0}{Z}$; a_0 = Bohr radius

$L = \hbar\sqrt{[\ell(\ell+1)]}$ $\quad L_z = m_\ell\hbar$

$\Delta\ell = \pm1$ and $\Delta m_\ell = 0, \pm1$.

$S = \hbar\sqrt{[s(s+1)]} = (\hbar\sqrt{3})/2$

$S_z = m_s\hbar$

MODERN THEORY OF SOLIDS AND SEMICONDUCTORS

$N_1/N_2 = \exp[-(E_1-E_2)/kT]$

$$f(E) = \frac{1}{1+\exp(\frac{E-E_F}{kT})}$$

$$E_{F0} = (\frac{h^2}{8m_e})\left[\frac{3n}{\pi}\right]^{2/3}$$

$$E_F(T) = E_{F0}\left[1 - \frac{\pi^2}{12}\left(\frac{kT}{E_{F0}}\right)^2\right]$$

$$E_{av}(T) = \frac{3}{5}E_{F0}\left[1 + \frac{5\pi^2}{12}\left(\frac{kT}{E_{F0}}\right)^2\right]$$

$$S = \frac{dV}{dT}$$

$$\Delta V = \int_{T_0}^{T} S\, dT$$

$$S = \frac{\pi^2 k^2 T}{2eE_{F0}}$$

$$n = N_C \exp[-(E_C - E_F)/kT]$$

$$p = N_V \exp[-(E_F - E_V)/kT]$$

$$N_C = 2[2\pi m_e^* kT/h^2]^{3/2}$$

$$N_V = 2[2\pi m_h^* kT/h^2]^{3/2}$$

$$n_i = (N_c N_v)^{1/2} \exp(-E_g/2kT)$$

$$n = (N_C N_d)^{1/2} \exp[-(E_C - E_d)/2kT]$$

$$d\Delta n/dt = G_{ph} - \Delta n/\tau_e$$

$$d\Delta p/dt = G_{ph} - \Delta p/\tau_h$$

$$\Delta n_{photo} = \Delta p_{photo}$$

$$J_h = ep\mu_h E - eD_h dp/dx$$

$$J_e = en\mu_e E + eD_e dn/dx$$

$$D_h/\mu_h = D_e/\mu_e = kT/e$$

$$L_h = \sqrt{(D_h \tau_h)}$$

$$L_e = \sqrt{(D_e \tau_e)}$$

$$\Delta p_n = p_n - p_{no}$$

$$\Delta p_n(x) = \Delta p_n(0) \exp(-x/L_h)$$

$$p_n(0) = p_{no} \exp(eV/kT)$$

$$V_o = (kT/e)\ln(p_{po}/p_{no})$$

$$V_o = (kT/e)\ln(n_{no}/n_{po})$$

$$n_{no}p_{no} = n_{po}p_{po} = n_i^2$$

$$J = [(eD_h/L_h N_d) + (eD_e/L_e N_a)]n_i^2[\exp(eV/kT) - 1]\ ; \qquad n_{no} = N_d,\ p_{po} = N_a$$

PHYSICAL CONSTANTS AND USEFUL INFORMATION

$c = 2.9979 \times 10^8$ m s^{-1}

$e = 1.6021 \times 10^{-19}$ C

$m_e = 9.1091 \times 10^{-31}$ kg

$h = 6.62608 \times 10^{-34}$ J s

$\hbar = h/(2\pi) = 1.05459 \times 10^{-31}$ J s

$N_A = 6.0221 \times 10^{23}$ mol^{-1}

$k = 1.3807 \times 10^{-23}$ J K^{-1}

$\varepsilon_o = 8.8542 \times 10^{-12}$ F m^{-1}

$\mu_o = 4\pi \times 10^{-7}$ H m^{-1}

Gas constant, $R = N_A k = 8.3144$ J K^{-1} mol^{-1} = 0.083144 L.bar K^{-1} mol^{-1}

Mass of proton = 1.67495×10^{-27} kg

Mass of hydrogen atom = 1.6736×10^{-27} kg

Acceleration due to gravity (at 45° latitude), g = 9.81 m s^{-2}

UNITS

SI UNITS

Length	meter	m
Mass	kilogram	kg
Time	second	s
Electric current	ampere	A
Temperature	kelvin	K

DERIVED SI UNITS

Electric charge	coulomb	C = A s
Electrical resistance	ohm	$\Omega = V/A = kg\ m^2\ A^{-2}\ s^{-3}$
Electrical conductance	siemen	$S = 1/\Omega$
Electrical capacitance	farad	$F = A\ s\ V^{-1} = A^2\ s^4\ kg^{-1}\ m^{-2}$
Electrical inductance	henry	$H = V\ s\ A^{-1} = kg\ m^2\ s^{-1}\ A^{-2}$
Energy	joule	$J = kg\ m^2\ s^{-2} = N\ m$
Force	newton	$N = kg\ m\ s^{-2}$
Magnetic flux	weber	$Wb = V\ s = kg\ m^2\ A^{-1}\ s^{-2}$
Magnetic flux density	tesla	$T = Wb\ m^{-2} = V\ s\ m^{-2} = kg\ A^{-1}\ s^{-2}$
Pressure	pascal	$Pa = N\ m^{-2}$
Power	watt	$W = J\ s^{-1} = kg\ m^2\ s^{-3}$
Electric potential difference	volt	$V = N\ m\ C^{-1} = kg\ m^2\ s^{-3}\ A^{-1}$
Frequency	hertz	$Hz = s^{-1}$